One-piece Structure
Standard Flat Spray Nozzles

VVP / VP

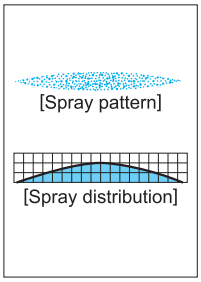

[Features]
- Flat spray pattern with a mountain-shaped spray distribution having gradually tapered edges.
- Tapered edges overlap to provide uniformity of spray distribution in multiple-nozzle arrangements.

[Standard Pressure]
0.3 MPa

[Applications]
Cleaning: Automotives, containers, films, felts, filters, screens, bottles, crushed stones, earth and sand, metal parts, machines, steel plates and pieces

Spraying: Etchants, oils, lubricants, liquids, solutions, insecticides, herbicides

Cooling: Gas, smokes, heat exchangers, tanks, steels, roofs

Water screen: Fire protection, heat protection, dust suppression, deodorization

VVP series

	VVP series
Structure	● Made of metal or plastic. ● Simple one-piece structure to be screwed into pipe. ● Removable strainer (metal nozzle only) is fitted and supplied as standard part with small capacity nozzle.
Material	● S303 or B (brass), PP (injection-molded polypropylene) ● S316L equivalent (precision-molded stainless steel)*2 ● Strainer for precision-molded stainless steel: S303 or S316 ● Optional material: S316, PVC, PVDF, Ultrahigh molecular weight polyethylene or others

Series	Pipe conn. size	Dimensions (mm)					Mass (g)*1			
		L_1	L_2	H	φD	N	S303	B	S316L equiv.	PP
VVP	⅛M	18.5	31	12	7.5	6.5	10	11	—	—
	¼M	26	40	14	10	10.5	21	23	—	—
	⅜M	30	—	19	—	10.5	37	40	—	—
	½M	38	—	23	—	14	65	70	—	—
	¾M	45	—	29	—	15	110	120	—	—
	1 M	55	—	35	—	18	170	180	—	—
VVP (Precision-molded stainless steel)*2	⅛M	20	33.5	12	7.5	7	—	—	9.6	—
	¼M	27	41	14	10	10.5	—	—	16	—
VVP-PP (Injection molded)	⅛M	22	—	12	—	8.5	—	—	—	1.1
	¼M	27	—	14	—	11.5	—	—	—	2.2

*1) When with a strainer, add 2–5 g to the above mass.
*2) Please refer to the chart on page 18 for availability.

[Note] Appearance and dimensions may differ slightly depending on materials and nozzle codes.

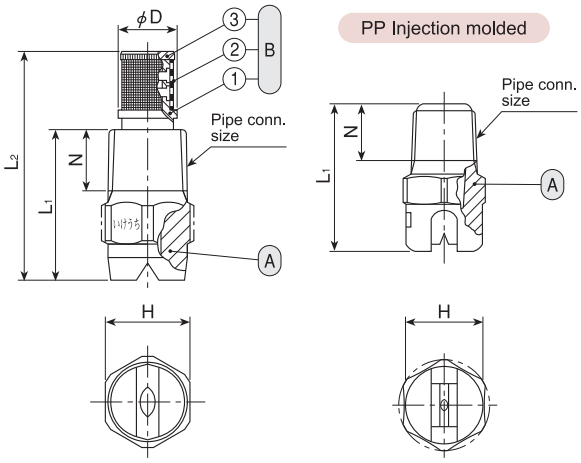

Ⓐ **Nozzle**
Ⓑ **Strainer** (①Strainer holder ②Strainer screen [S316] ③Strainer cap)

Precision-molded stainless steel

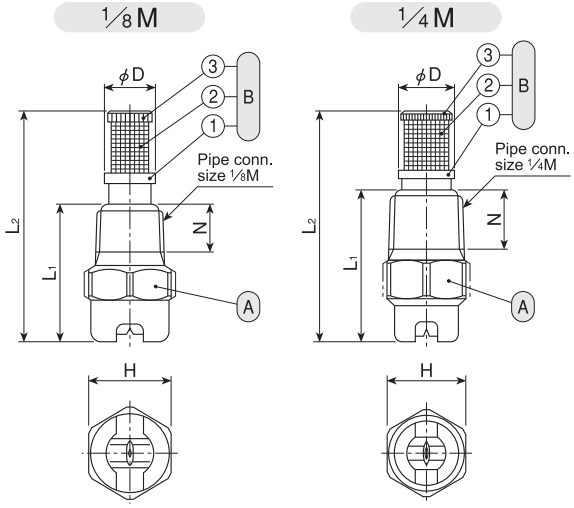

Ⓐ **Nozzle**
Ⓑ **Strainer** (①Strainer holder ②Strainer screen [S316] ③Strainer cap)

VP series

	VP series (with ceramic orifice inserted)
Structure	● Ceramic orifice inserted and adhered into metal or plastic body. ● Simple one-piece structure to be screwed into pipe. ● Removable strainer is fitted and supplied as standard part with small capacity nozzle. ● CERTIIM® is a plastic spray nozzle with a one-shot injection molded ceramic orifice.
Material	● Spray orifice: ceramic ● Metal parts: S303 or B (brass) ● CERTIIM®'s plastic body: PVDF (polyvinylidene fluoride) ● Optional material: S316 or others

Body	Pipe conn. size	Dimensions (mm)					Mass (g)*1		
		L_1	L_2	H	φD	N	S303	B	CER-TIIM®
Metal	⅛M	16.5	30	12	7.5	6.5	8	9	—
	¼M	26	40	14	10	10.5	20	22	—
CERTIIM®	⅛M	22	—	12	—	8.5	—	—	2.1
	¼M	26	—	14	—	10.5	—	—	6

*1) When with a strainer, add 2–5 g to the above mass.

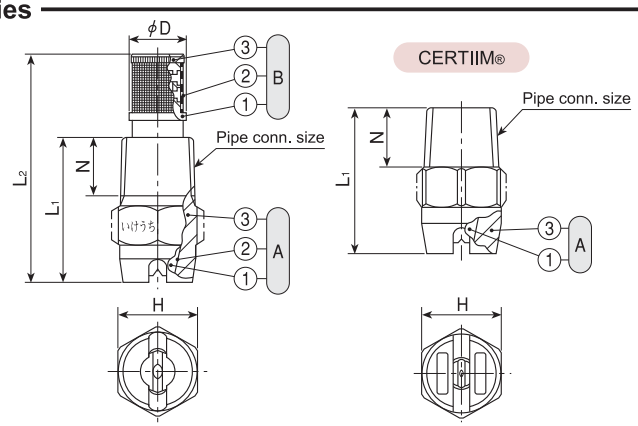

Ⓐ**Nozzle** (①Ceramic orifice ②Adhesive: Araldite® ③Body)
Ⓑ**Strainer** (①Strainer holder ②Strainer screen [S316] ③Strainer cap)

[Note] Appearance and dimensions may differ slightly depending on materials and nozzle codes.

■VVP series, VP series

Spray Angle Code	Spray Capacity Code	Pipe Connection Size: VVP All Metal ⅛M	VVP All Metal ¼M	VVP All Metal ⅜M	VVP All Metal ½M	VVP All Metal ¾M	VVP All Metal 1M	VVP All Plastic ⅛M	VVP All Plastic ¼M	VP Metal ⅛M	VP Metal ¼M	VP CER-TIIM® ⅛M	VP CER-TIIM® ¼M	Spray Angle (°) 0.15 MPa	0.3 MPa	0.7 MPa	Spray Capacity (ℓ/min) 0.05 MPa	0.1 MPa	0.15 MPa	0.2 MPa	0.3 MPa	0.5 MPa	0.7 MPa	1 MPa	2 MPa	Mean Drop. Dia. (μm)	Free Pass. Dia. (mm)	Strainer Mesh Size
115	03							○	○	●	●	○	○	101	115	124	—	0.17	0.21	0.24	0.30	0.39	0.46	0.55	0.77	140	0.2	200
	04							○	○	●	●	○	○	102	115	124	—	0.23	0.28	0.33	0.40	0.52	0.61	0.73	1.03	∫	0.2	200
	05							○	○	●	●	○	○	102	115	124	—	0.29	0.35	0.41	0.50	0.65	0.76	0.91	1.29	160	0.3	150
	07							○	○	●	●	○	○	103	115	124	—	0.40	0.49	0.57	0.70	0.90	1.07	1.28	1.81	∫	0.3	150
	10							○	○	●	●	○	○	103	115	124	0.41	0.58	0.71	0.82	1.00	1.29	1.53	1.83	2.58		0.4	150
	15	●	●					○	○	●	●	○	○	104	115	123	0.61	0.87	1.06	1.23	1.50	1.94	2.29	2.74	3.87		0.5	100
	20	●	●					○	○		●		○	104	115	123	0.82	1.15	1.41	1.63	2.00	2.58	3.06	3.65	5.16	270	0.6	100
	30	●	●					○	○		●		○	105	115	122	1.23	1.73	2.12	2.45	3.00	3.88	4.58	5.48	7.75		0.8	50
	40	●	●					○	○					106	115	122	1.63	2.31	2.83	3.27	4.00	5.16	6.11	7.30	10.3		0.8	50
	60	○	○											107	115	121	2.45	3.46	4.24	4.90	6.00	7.75	9.17	11.0	15.5	∫	1.0	—
	80	○	○											107	115	121	3.27	4.62	5.66	6.53	8.00	10.3	12.2	14.6	20.6		1.2	—
	100		○											107	115	120	4.08	5.77	7.07	8.17	10.0	12.9	15.3	18.3	25.8		1.7	—
	200		○											109	115	120	8.16	11.5	14.1	16.3	20.0	25.8	30.6	36.5	51.6	510	2.4	—
	230			○										109	115	119	9.39	13.3	16.3	18.8	23.0	29.7	35.1	42.0	59.4		2.7	—
	260			○										109	115	119	10.6	15.0	18.4	21.2	26.0	33.6	39.7	47.5	67.1	∫	2.8	—
	300			○										109	115	119	12.2	17.3	21.2	24.5	30.0	38.7	45.8	54.8	77.5		3.0	—
	400				○									110	115	118	16.3	23.1	28.3	32.7	40.0	51.6	61.1	73.0	103	580	3.5	—
	500				○									110	115	118	20.4	28.9	35.4	40.8	50.0	64.6	76.4	91.3	129	∫	3.9	—
	600				○									111	115	118	24.5	34.6	42.4	49.0	60.0	77.5	91.7	110	155	610	4.3	—
	800					○								111	115	117	32.7	46.2	56.5	65.3	80.0	103	122	146	206	700	5.0	—
	1000					○								111	115	117	40.8	57.7	70.7	81.7	100	129	153	183	258	∫	5.6	—
	1500						○							111	115	117	61.2	86.6	106	122	150	194	229	274	387	900	7.2	—
90	02									●	●	○	○	76	90	100	—	0.12	0.14	0.16	0.20	0.26	0.31	0.37	0.52	145	0.2	200
	03							○	○	●	●	○	○	76	90	100	—	0.17	0.21	0.24	0.30	0.39	0.46	0.55	0.77	150	0.2	200
	04							○	○	●	●	○	○	77	90	100	—	0.23	0.28	0.33	0.40	0.52	0.61	0.73	1.03	∫	0.3	150
	05							○	○	●	●	○	○	77	90	100	—	0.29	0.35	0.41	0.50	0.65	0.76	0.91	1.29	170	0.3	150
	07							○	○	●	●	○	○	78	90	100	—	0.40	0.49	0.57	0.70	0.90	1.07	1.28	1.81		0.4	150
	10							○	○		●		○	78	90	99	0.41	0.58	0.71	0.82	1.00	1.29	1.53	1.83	2.58	∫	0.5	100
	15	●	●					○	○		●		○	79	90	99	0.61	0.87	1.06	1.23	1.50	1.94	2.29	2.74	3.87		0.6	100
	20	●	●					○	○		●		○	79	90	98	0.82	1.15	1.41	1.63	2.00	2.58	3.06	3.65	5.16		0.7	50
	30	●	●					○	○		●		○	80	90	97	1.23	1.73	2.12	2.45	3.00	3.88	4.58	5.48	7.75	280	0.9	50
	40	○	○					○	○		○		○	81	90	97	1.63	2.31	2.83	3.27	4.00	5.16	6.11	7.30	10.3		1.1	—
	50	○	○					○	○		○		○	81	90	97	2.04	2.89	3.54	4.08	5.00	6.46	7.64	9.13	12.9		1.2	—
	60	○	○											82	90	96	2.45	3.46	4.24	4.90	6.00	7.75	9.17	11.0	15.5		1.3	—
	80	○	○											82	90	96	3.27	4.62	5.66	6.53	8.00	10.3	12.2	14.6	20.6		1.5	—
	100	○												82	90	96	4.08	5.77	7.07	8.17	10.0	12.9	15.3	18.3	25.8	∫	1.7	—
	120	○												83	90	95	4.90	6.93	8.49	9.80	12.0	15.5	18.3	21.9	31.0		2.0	—
	140		○											83	90	95	5.72	8.08	9.90	11.4	14.0	18.1	21.4	25.6	36.1		2.2	—
	170		○											83	90	95	6.94	9.82	12.0	13.9	17.0	22.0	26.0	31.1	43.9		2.4	—
	200		○											84	90	95	8.16	11.5	14.1	16.3	20.0	25.8	30.6	36.5	51.6	540	2.6	—
	230		○											84	90	94	9.39	13.3	16.3	18.8	23.0	29.7	35.1	42.0	59.4		2.8	—
	260		○											84	90	94	10.6	15.0	18.4	21.2	26.0	33.6	39.7	47.5	67.1	∫	3.1	—
	300		○											84	90	94	12.2	17.3	21.2	24.5	30.0	38.7	45.8	54.8	77.5		3.4	—
	400			○										85	90	94	16.3	23.1	28.3	32.7	40.0	51.6	61.1	73.0	103	580	3.8	—
	500				○									85	90	93	20.4	28.9	35.4	40.8	50.0	64.6	76.4	91.3	129	∫	4.2	—
	600				○									86	90	93	24.5	34.6	42.4	49.0	60.0	77.5	91.7	110	155		4.7	—
	800				○									86	90	93	32.7	46.2	56.5	65.3	80.0	103	122	146	206	700	5.4	—
	900					○								86	90	92	36.7	52.0	63.6	73.5	90.0	116	137	164	232	750	5.7	—
	1000					○								86	90	92	40.8	57.7	70.7	81.7	100	129	153	183	258	∫	6.0	—
	1200					○								86	90	92	49.0	69.3	84.9	98.0	120	155	183	219	310		6.6	—
	1500						○							86	90	92	61.2	86.6	106	122	150	194	229	274	387	950	7.2	—

●……With strainer ○……Without strainer

One-piece Structure Standard Flat Spray Nozzles
VVP / VP series

Spray Angle Code	Spray Capacity Code	Pipe Connection Size												Spray Angle (°)			Spray Capacity (ℓ/min)									Mean Drop. Dia. (μm)	Free Pass. Dia. (mm)	Strainer Mesh Size
		VVP								VP																		
		All Metal						All Plastic		Metal		CER-TIIM®		0.15 MPa	0.3 MPa	0.7 MPa	0.05 MPa	0.1 MPa	0.15 MPa	0.2 MPa	0.3 MPa	0.5 MPa	0.7 MPa	1 MPa	2 MPa			
		⅛M	¼M	⅜M	½M	¾M	1M	⅛M	¼M	⅛M	¼M	⅛M	¼M															
80	02									●	●	○	○	67	80	90	—	0.12	0.14	0.16	0.20	0.26	0.31	0.37	0.52	150	0.2	200
	03									●	●	○	○	67	80	90	—	0.17	0.21	0.24	0.30	0.39	0.46	0.55	0.77	∫	0.3	150
	04									●	●	○	○	67	80	90	—	0.23	0.28	0.33	0.40	0.52	0.61	0.73	1.03		0.3	150
	05	●	●					○	○	●	●	○	○	67	80	90	—	0.29	0.35	0.41	0.50	0.65	0.76	0.91	1.29	180	0.3	150
	07	●	●							●	●	○	○	68	80	89	—	0.40	0.49	0.57	0.70	0.90	1.07	1.28	1.81		0.4	150
	10	●						○	○		●		○	68	80	89	0.41	0.58	0.71	0.82	1.00	1.29	1.53	1.83	2.58	∫	0.5	100
	15										●		○	69	80	88	0.61	0.87	1.06	1.23	1.50	1.94	2.29	2.74	3.87		0.7	50
	20	●	●								●		○	69	80	88	0.82	1.15	1.41	1.63	2.00	2.58	3.06	3.65	5.16		0.8	50
	30	○	○								○		○	70	80	87	1.23	1.73	2.12	2.45	3.00	3.88	4.58	5.48	7.75	290	1.0	—
	40	○	○					○	○		○		○	71	80	87	1.63	2.31	2.83	3.27	4.00	5.16	6.11	7.30	10.3		1.2	—
	50										○		○	71	80	86	2.04	2.89	3.54	4.08	5.00	6.46	7.64	9.13	12.9		1.4	—
	60										○		○	72	80	86	2.45	3.46	4.24	4.90	6.00	7.75	9.17	11.0	15.5	∫	1.5	—
	80	○	○											72	80	86	3.27	4.62	5.66	6.53	8.00	10.3	12.2	14.6	20.6		1.7	—
	100	○												72	80	85	4.08	5.77	7.07	8.17	10.0	12.9	15.3	18.3	25.8		1.8	—
	120	○												73	80	85	4.90	6.93	8.49	9.80	12.0	15.5	18.3	21.9	31.0		2.1	—
	200		○											74	80	85	8.16	11.5	14.1	16.3	20.0	25.8	30.6	36.5	51.6	550	2.9	—
	300		○											74	80	84	12.2	17.3	21.2	24.5	30.0	38.7	45.8	54.8	77.5	570	3.7	—
	400			○										75	80	83	16.3	23.1	28.3	32.7	40.0	51.6	61.1	73.0	103	600	4.1	—
	500			○										75	80	83	20.4	28.9	35.4	40.8	50.0	64.6	76.4	91.3	129		4.8	—
	600				○									76	80	83	24.5	34.6	42.4	49.0	60.0	77.5	91.7	110	155	∫	5.1	—
	800				○									76	80	82	32.7	46.2	56.5	65.3	80.0	103	122	146	206		6.1	—
	1000					○								76	80	82	40.8	57.7	70.7	81.7	100	129	153	183	258	850	6.2	—
65	02									●	●	○	○	52	65	75	—	0.12	0.14	0.16	0.20	0.26	0.31	0.37	0.52	155	0.2	200
	03							○	○	●	●	○	○	52	65	75	—	0.17	0.21	0.24	0.30	0.39	0.46	0.55	0.77	160	0.3	150
	04							○	○	●	●	○	○	52	65	75	—	0.23	0.28	0.33	0.40	0.52	0.61	0.73	1.03	∫	0.3	150
	05							○	○	●	●	○	○	52	65	74	—	0.29	0.35	0.41	0.50	0.65	0.76	0.91	1.29	190	0.4	150
	07							○	○	●	●	○	○	53	65	74	—	0.40	0.49	0.57	0.70	0.90	1.07	1.28	1.81		0.5	100
	10							○	○		●		○	54	65	73	0.41	0.58	0.71	0.82	1.00	1.29	1.53	1.83	2.58	∫	0.6	100
	15	●	●					○	○		●		○	54	65	73	0.61	0.87	1.06	1.23	1.50	1.94	2.29	2.74	3.87		0.8	50
	20	●	●					○	○		●		○	55	65	72	0.82	1.15	1.41	1.63	2.00	2.58	3.06	3.65	5.16	310	0.9	50
	30	○	○					○	○		○		○	56	65	72	1.23	1.73	2.12	2.45	3.00	3.88	4.58	5.48	7.75		1.1	—
	40	○	○					○	○		○		○	56	65	71	1.63	2.31	2.83	3.27	4.00	5.16	6.11	7.30	10.3		1.3	—
	50	○	○					○	○		○		○	57	65	71	2.04	2.89	3.54	4.08	5.00	6.46	7.64	9.13	12.9		1.5	—
	60	○	○								○		○	57	65	71	2.45	3.46	4.24	4.90	6.00	7.75	9.17	11.0	15.5		1.6	—
	80	○	○					○	○		○		○	58	65	71	3.27	4.62	5.66	6.53	8.00	10.3	12.2	14.6	20.6	∫	1.9	—
	100	○												58	65	70	4.08	5.77	7.07	8.17	10.0	12.9	15.3	18.3	25.8		2.1	—
	120	○												58	65	70	4.90	6.93	8.49	9.80	12.0	15.5	18.3	21.9	31.0		2.3	—
	140		○											59	65	69	5.72	8.08	9.90	11.4	14.0	18.1	21.4	25.6	36.1		2.5	—
	170		○											59	65	69	6.94	9.82	12.0	13.9	17.0	22.0	26.0	31.1	43.9		2.8	—
	200		○											59	65	69	8.16	11.5	14.1	16.3	20.0	25.8	30.6	36.5	51.6	580	3.0	—
	300		○											60	65	69	12.2	17.3	21.2	24.5	30.0	38.7	45.8	54.8	77.5	650	3.9	—
	400			○										60	65	68	16.3	23.1	28.3	32.7	40.0	51.6	61.1	73.0	103		4.7	—
	500			○										61	65	67	20.4	28.9	35.4	40.8	50.0	64.6	76.4	91.3	129		5.3	—
	600				○									61	65	67	24.5	34.6	42.4	49.0	60.0	77.5	91.7	110	155	∫	5.7	—
	800				○									62	65	67	32.7	46.2	56.5	65.3	80.0	103	122	146	206		6.5	—
	1000					○								62	65	66	40.8	57.7	70.7	81.7	100	129	153	183	258		7.3	—
	1500					○								62	65	66	61.2	86.6	106	122	150	194	229	274	387	1,000	9.0	—
50	03										●		○	37	50	60	—	0.17	0.21	0.24	0.30	0.39	0.46	0.55	0.77	180	0.3	150
	04										●		○	37	50	60	—	0.23	0.28	0.33	0.40	0.52	0.61	0.73	1.03	∫	0.4	150
	05	●	●								●		○	38	50	59	—	0.29	0.35	0.41	0.50	0.65	0.76	0.91	1.29	210	0.4	150
	07	●	●								●		○	38	50	58	—	0.40	0.49	0.57	0.70	0.90	1.07	1.28	1.81		0.5	100
	10	●	●								●		○	40	50	58	0.41	0.58	0.71	0.82	1.00	1.29	1.53	1.83	2.58	∫	0.6	100
	15										●		○	40	50	57	0.61	0.87	1.06	1.23	1.50	1.94	2.29	2.74	3.87		0.8	50
	20	○	○								○		○	41	50	57	0.82	1.15	1.41	1.63	2.00	2.58	3.06	3.65	5.16		1.0	—
	30	○	○					○	○		○		○	42	50	56	1.23	1.73	2.12	2.45	3.00	3.88	4.58	5.48	7.75	340	1.2	—
	40	○	○								○		○	42	50	56	1.63	2.31	2.83	3.27	4.00	5.16	6.11	7.30	10.3		1.4	—
	50										○		○	43	50	55	2.04	2.89	3.54	4.08	5.00	6.46	7.64	9.13	12.9	∫	1.6	—
	60										○		○	43	50	55	2.45	3.46	4.24	4.90	6.00	7.75	9.17	11.0	15.5		1.7	—
	80	○	○								○		○	43	50	55	3.27	4.62	5.66	6.53	8.00	10.3	12.2	14.6	20.6		2.0	—
	120	○												44	50	54	4.90	6.93	8.49	9.80	12.0	15.5	18.3	21.9	31.0	550	2.5	—
	200		○											45	50	53	8.16	11.5	14.1	16.3	20.0	25.8	30.6	36.5	51.6	640	3.3	—
	300		○											45	50	53	12.2	17.3	21.2	24.5	30.0	38.7	45.8	54.8	77.5		4.2	—
	400			○										46	50	52	16.3	23.1	28.3	32.7	40.0	51.6	61.1	73.0	103	∫	4.9	—
	500			○										46	50	52	20.4	28.9	35.4	40.8	50.0	64.6	76.4	91.3	129		5.6	—
	600				○									47	50	52	24.5	34.6	42.4	49.0	60.0	77.5	91.7	110	155	750	6.1	—
	800				○									47	50	51	32.7	46.2	56.5	65.3	80.0	103	122	146	206	∫	7.1	—
	1000					○								47	50	51	40.8	57.7	70.7	81.7	100	129	153	183	258	1,000	7.9	—
	1500					○								48	50	51	61.2	86.6	106	122	150	194	229	274	387	1,100	9.7	—

●……With strainer　○……Without strainer

Spray Angle Code	Spray Capacity Code	Pipe Connection Size: VVP All Metal ⅛M	VVP All Metal ¼M	VVP All Metal ⅜M	VVP All Metal ½M	VVP All Metal ¾M	VVP All Metal 1M	VVP All Plastic ⅛M	VVP All Plastic ¼M	VP Metal ⅛M	VP Metal ¼M	VP CER-TIIM® ⅛M	VP CER-TIIM® ¼M	Spray Angle (°) 0.15 MPa	0.3 MPa	0.7 MPa	Spray Capacity (ℓ/min) 0.05 MPa	0.1 MPa	0.15 MPa	0.2 MPa	0.3 MPa	0.5 MPa	0.7 MPa	1 MPa	2 MPa	Mean Drop. Dia. (μm)	Free Pass. Dia. (mm)	Strainer Mesh Size
40	05	●	●											30	40	48	—	0.29	0.35	0.41	0.50	0.65	0.76	0.91	1.29	230	0.4	150
	07	●	●											30	40	48	—	0.40	0.49	0.57	0.70	0.90	1.07	1.28	1.81	~	0.5	100
	10	●	●											31	40	47	0.41	0.58	0.71	0.82	1.00	1.29	1.53	1.83	2.58		0.7	50
	20	○	○											32	40	46	0.82	1.15	1.41	1.63	2.00	2.58	3.06	3.65	5.16	380	1.0	—
	30	○	○											33	40	46	1.23	1.73	2.12	2.45	3.00	3.88	4.58	5.48	7.75		1.3	—
	40	○	○											33	40	45	1.63	2.31	2.83	3.27	4.00	5.16	6.11	7.30	10.3	~	1.5	—
	80	○	○											34	40	44	3.27	4.62	5.66	6.53	8.00	10.3	12.2	14.6	20.6		2.1	—
	120	○												35	40	44	4.90	6.93	8.49	9.80	12.0	15.5	18.3	21.9	31.0		2.8	—
	200		○											35	40	43	8.16	11.5	14.1	16.3	20.0	25.8	30.6	36.5	51.6	710	3.5	—
	300		○											36	40	42	12.2	17.3	21.2	24.5	30.0	38.7	45.8	54.8	77.5	800	4.5	—
	400			○										36	40	42	16.3	23.1	28.3	32.7	40.0	51.6	61.1	73.0	103	~	5.3	—
	500			○										37	40	42	20.4	28.9	35.4	40.8	50.0	64.6	76.4	91.3	129	850	5.8	—
	600				○									37	40	42	24.5	34.6	42.4	49.0	60.0	77.5	91.7	110	155	~	6.6	—
	800				○									37	40	41	32.7	46.2	56.5	65.3	80.0	103	122	146	206		7.4	—
	1000					○								38	40	41	40.8	57.7	70.7	81.7	100	129	153	183	258	1,100	8.3	—
	1500					○								38	40	41	61.2	86.6	106	122	150	194	229	274	387	1,200	10.3	—
25	05	●	●											18	25	32	—	0.29	0.35	0.41	0.50	0.65	0.76	0.91	1.29	270	0.5	100
	07	●	●											18	25	32	—	0.40	0.49	0.57	0.70	0.90	1.07	1.28	1.81	~	0.6	100
	15	○	○											19	25	31	0.61	0.87	1.06	1.23	1.50	1.94	2.29	2.74	3.87		1.0	—
	30	○	○											19	25	30	1.23	1.73	2.12	2.45	3.00	3.88	4.58	5.48	7.75	440	1.4	—
	40	○	○											19	25	30	1.63	2.31	2.83	3.27	4.00	5.16	6.11	7.30	10.3	~	1.7	—
	80	○	○											20	25	29	3.27	4.62	5.66	6.53	8.00	10.3	12.2	14.6	20.6		2.3	—
	200		○											21	25	27	8.16	11.5	14.1	16.3	20.0	25.8	30.6	36.5	51.6	850	4.0	—
	300		○											21	25	27	12.2	17.3	21.2	24.5	30.0	38.7	45.8	54.8	77.5	950	4.9	—
15	05	●	●											9	15	22	—	0.29	0.35	0.41	0.50	0.65	0.76	0.91	1.29	310	0.5	100
	07	●	●											9	15	21	—	0.40	0.49	0.57	0.70	0.90	1.07	1.28	1.81	~	0.7	50
	15	○	○											10	15	20	0.61	0.87	1.06	1.23	1.50	1.94	2.29	2.74	3.87		1.0	—
	30	○	○											10	15	19	1.23	1.73	2.12	2.45	3.00	3.88	4.58	5.48	7.75	510	1.5	—
	40	○	○											10	15	19	1.63	2.31	2.83	3.27	4.00	5.16	6.11	7.30	10.3	~	1.7	—
	80	○	○											11	15	18	3.27	4.62	5.66	6.53	8.00	10.3	12.2	14.6	20.6		2.4	—
	200		○											11	15	17	8.16	11.5	14.1	16.3	20.0	25.8	30.6	36.5	51.6	1,000	4.0	—
	300		○											12	15	17	12.2	17.3	21.2	24.5	30.0	38.7	45.8	54.8	77.5	1,100	5.0	—

●……With strainer　○……Without strainer

■VVP series (Precision-molded stainless steel, small spray capacity)

Spray Angle Code	Spray Capacity Code	Pipe Conn. Size ⅛M	¼M	Spray Angle (°) 0.15 MPa	0.3 MPa	0.7 MPa	Spray Capacity (ℓ/min) 0.05 MPa	0.1 MPa	0.15 MPa	0.2 MPa	0.3 MPa	0.5 MPa	0.7 MPa	1 MPa	2 MPa	Mean Drop. Dia. (μm)	Free Pass. Dia. (mm)	Strainer Mesh Size
115	03	●	●	101	115	124	—	—	0.21	0.24	0.30	0.39	0.46	0.55	0.77	140	0.2	200
	04	●	●	102	115	124	—	—	0.28	0.33	0.40	0.52	0.61	0.73	1.03		0.2	200
	05	●	●	102	115	124	—	0.29	0.35	0.41	0.50	0.65	0.76	0.91	1.29	~	0.3	150
	07	●	●	103	115	124	—	0.40	0.49	0.57	0.70	0.90	1.07	1.28	1.81		0.3	150
	10	●	●	103	115	124	0.41	0.58	0.71	0.82	1.00	1.29	1.53	1.83	2.58	270	0.4	150
90	03	●	●	76	90	100	—	—	0.21	0.24	0.30	0.39	0.46	0.55	0.77	150	0.2	200
	04	●	●	77	90	100	—	—	0.28	0.33	0.40	0.52	0.61	0.73	1.03		0.3	150
	05	●	●	77	90	100	—	0.29	0.35	0.41	0.50	0.65	0.76	0.91	1.29	~	0.3	150
	07	●	●	78	90	100	—	0.40	0.49	0.57	0.70	0.90	1.07	1.28	1.81		0.4	150
	10	●	●	78	90	99	0.41	0.58	0.71	0.82	1.00	1.29	1.53	1.83	2.58	280	0.5	100
80	07		●	68	80	89	—	0.40	0.49	0.57	0.70	0.90	1.07	1.28	1.81	180 ~ 290	0.4	150
	10		●	68	80	89	0.41	0.58	0.71	0.82	1.00	1.29	1.53	1.83	2.58		0.5	100
65	03	●	●	52	65	75	—	—	0.21	0.24	0.30	0.39	0.46	0.55	0.77	160	0.3	150
	04	●	●	52	65	75	—	—	0.28	0.33	0.40	0.52	0.61	0.73	1.03		0.3	150
	05	●	●	52	65	74	—	0.29	0.35	0.41	0.50	0.65	0.76	0.91	1.29	~	0.4	150
	07	●	●	53	65	74	—	0.40	0.49	0.57	0.70	0.90	1.07	1.28	1.81		0.5	100
	10	●	●	54	65	73	0.41	0.58	0.71	0.82	1.00	1.29	1.53	1.83	2.58	310	0.6	100

●……With strainer (Also available without strainer)

How to order

Please inquire or order for a specific nozzle using this coding system.

① VVP / VP series

〈Example〉…¼MVVP11515S303W

¼M	VVP	115	15	S303	W
Pipe Conn. Size	Series	Spray Angle Code	Spray Capacity Code	Material*	Strainer
⅛M	VVP	115	02	S303	W (with Strainer)
~	VP	~	~	B	– (without Strainer)
1M		15	1500	TPVDF	
				PP-IN	

*TPVDF for VP only,
PP-IN for VVP only

② VVP series (Precision-molded stainless steel, small spray capacity)

〈Example〉…¼MVVP6507S316L-IN+WS303

¼M	VVP	65	07	S316L-IN+	W	S303
Pipe Conn. Size		Spray Angle Code	Spray Capacity Code		Strainer	Strainer Material
⅛M		115	03		W (with Strainer)	S303
¼M		~	04		– (without Strainer)	S316
		65	05			
			07			
			10			

Effective Use of Standard Flat Spray Nozzles

Strainer Mesh Size

The strainer fitted inside the nozzle comprises strainer holder, strainer screen and strainer cap.

Strainer mesh size	Opening (mm)	Free passage diameter (mm)
#200	0.07	below 0.2
#150	0.10	0.3–0.4
#100	0.15	0.5–0.7
#50	0.30	0.8–0.9

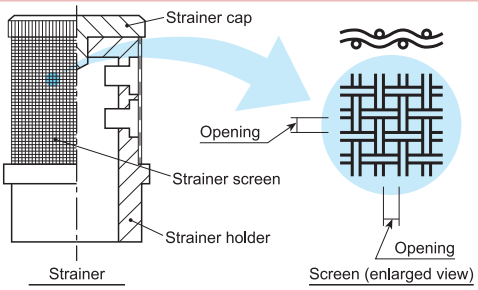

Advantages and Disadvantages of Ceramic Nozzles

- CERJET® Ceramic Nozzle can resist most acids and strong corrosive liquid except for hydrofluoric acid and strong alkalis (pH 12 or higher).
- CERJET® Ceramic Nozzle has high wear resistance (its hardness Mohs scale 7), several hundred times that of brass and 20–30 times that of stainless steel. It is well-suited for high pressure cleaning. However, it is brittle and may crack by quenching or sudden temperature drops of more than 200°C.
- For attaching the ceramic orifice to the metal body or retainer, epoxy resin adhesive (Araldite®) is used. In applications where epoxy resin is not suitable, CERTIIM® with the ceramic orifice inserted into a plastic body or retainer by injection molding is recommended.

Free Passage Diameter

The standard flat spray nozzle orifice has a cat-eye shape. The free passage diameter is the orifice width multiplied with a safety factor.

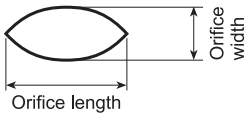

Spray Distribution

The standard flat spray nozzles are designed to produce a mountain-shaped distribution in order to obtain a uniform spray distribution in a multiple-nozzle arrangement.
Although the distribution depends on spray height, nozzle spacing, liquid pressure and liquid nature, you need spray nozzles guaranteed in spray performance to get the desired superimposed spray distribution.
IKEUCHI nozzles have guaranteed spray angles and spray capacities in order to maintain uniform distribution.

① **Spray distribution of nozzles with no quality guarantee**

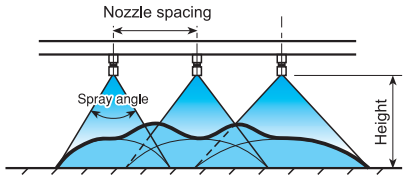

Uniform distribution is not obtained.

② **Spray distribution of nozzles guaranteed in spray performance**

Uniform distribution is formed by overlapping mountain-shaped distributions.

Example of multiple-nozzle arrangement

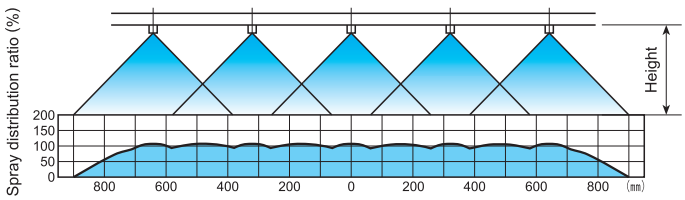

Viscosity

There is a tendency for spray capacity and spray angle to be decreased and also for spray distribution to deteriorate if the viscosity of the liquid is increased. The resistance of liquid in the pipe is also increased. When spraying such liquids, pressure drop in the pipe must be also taken into consideration.

Spray specification on ¼MVVP9050

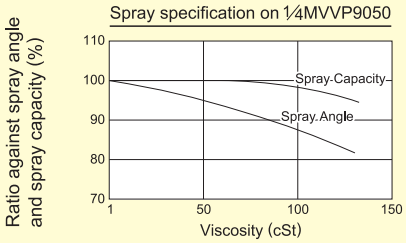

Comparison of Wear-resistance

The comparison of wear-resistance between a UVVP series flat spray nozzle and our conventional type is shown here.

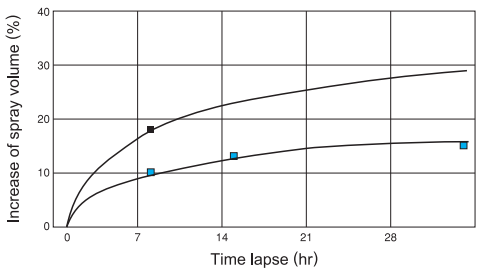

■ Conventional type
■ UVVP series

Pressure: 0.3 MPa
Test liquid: $A\ell_2O_3$ (#200) in water
Percentage of $A\ell_2O_3$: 20wt%