HIGH PERFORMANCE
BUTTERFLY VALVES

Tri-eccentric Metal Seated

Butterfly Valve

FEATURES AND PERFORMANCE

- The seal is adjustable and replaceable, which prolongs the service life.
- With the floating seal, the seal ring can properly self-adjust its position by the valve closing press in order to bring the disc in fully contact with the seat, and realize an even seal pressure ratio and zero leakage.
- The triple eccentric structure facilitates an immediate opening or closing with less friction.
- The position device along the shaft eliminates any possible leakage due to damage or wearing at the upper and bottom seal faces, resulted from the up and down axial movement of the disc, which makes it possible to install the actuator in any direction (for sizes over DN500, we suggest horizontal installation).
- Valves suitable for unidirectional services.

Bi-eccentric PTFE Seated

Butterfly Valve

FEATURES AND PERFORMANCE

- Fixed spherical surface seal structure. The more pressure on the disc, the better sealing effect.
- With 4 times of seal adjusting. The service life is times longer compared with standard gate valve, stop valve, ball valve, etc.
- Easy to open and close by means of the eccentric structure.
- V-type axial contact packing realises a Grade A corrosion resistant seal.
- In average, 75% smaller in volume, 70% lighter in weight and 50% lower in price than standard gate valves, etc.

Main components,

materials and properties

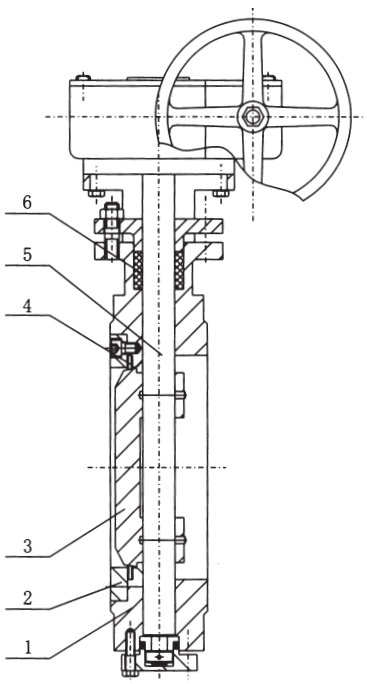

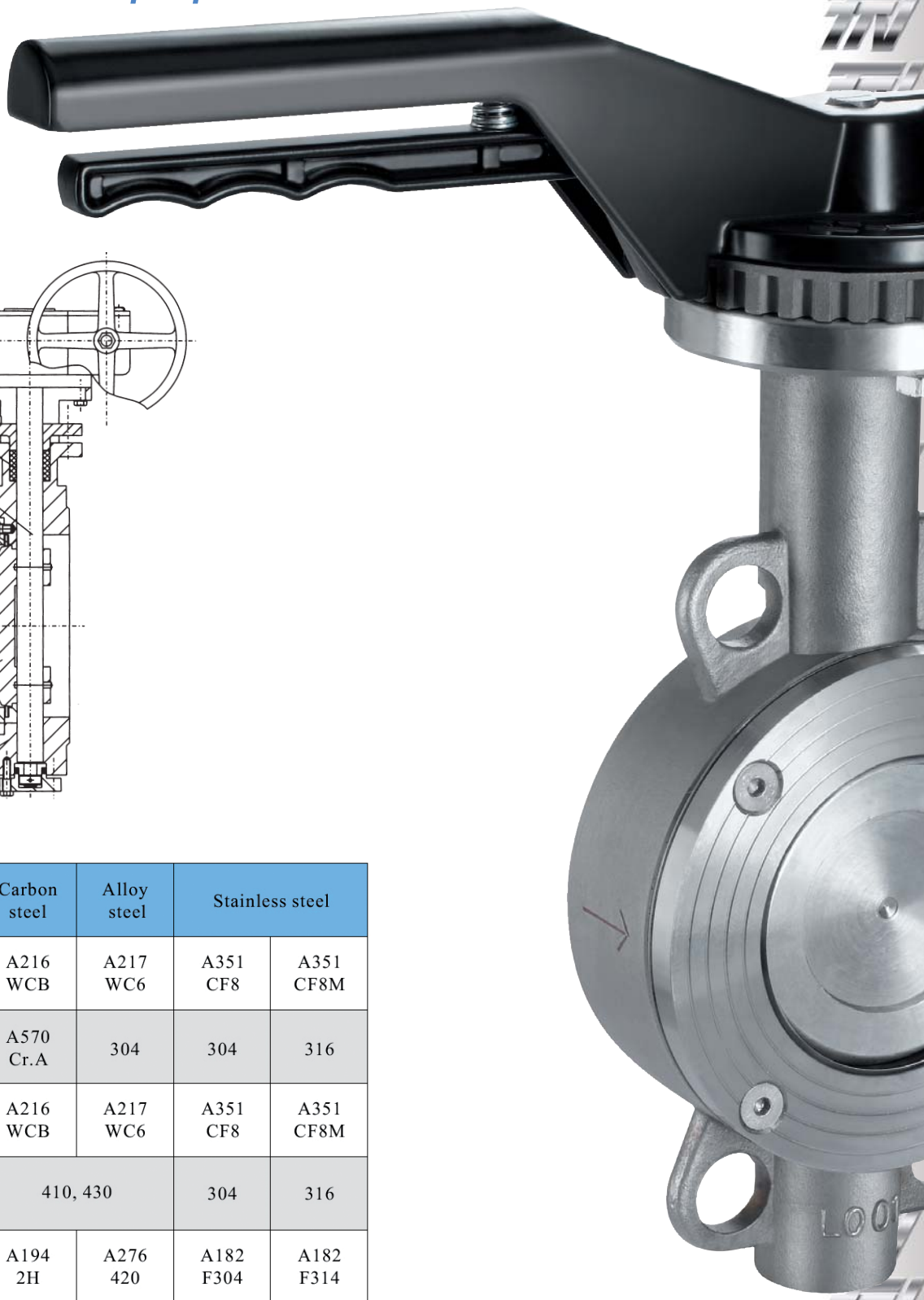

NO.	Name	Carbon steel	Alloy steel	Stainless steel	
1	Valve body	A216 WCB	A217 WC6	A351 CF8	A351 CF8M
2	Retaining ring	A570 Cr.A	304	304	316
3	Disc	A216 WCB	A217 WC6	A351 CF8	A351 CF8M
4	Seat	410, 430		304	316
5	Stem	A194 2H	A276 420	A182 F304	A182 F314
6	Packing	Flexible graphite			
Suitable mediums		Water, steam, oil		Nitric acid	Acetic acid
Suitable temperature		-29~425℃	-29~595℃	-196~600℃	

Disassembled view and components

Tri-eccentric Metal Seated

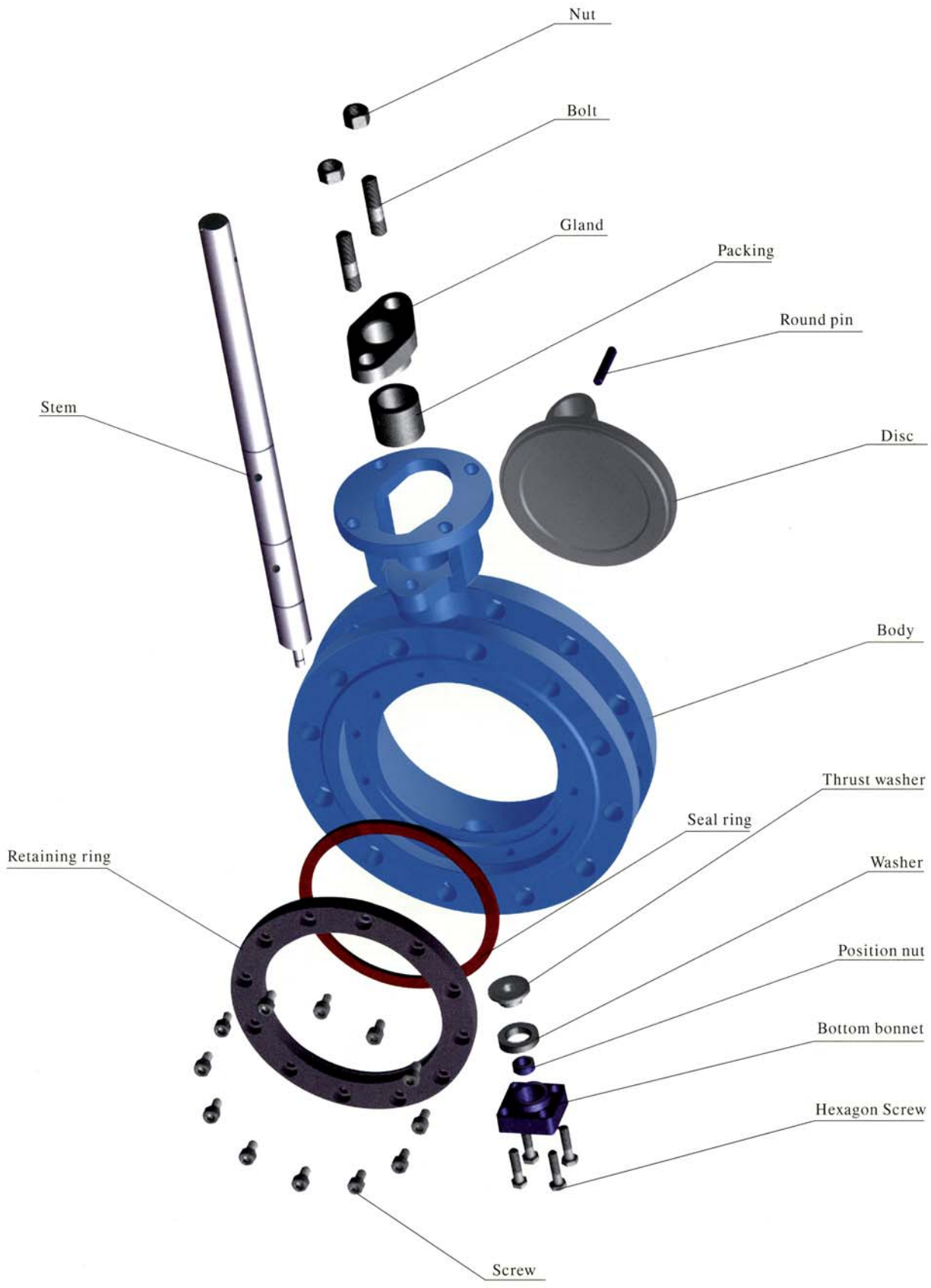

Disassembled view and components

Bi-eccentric PTFE Seated

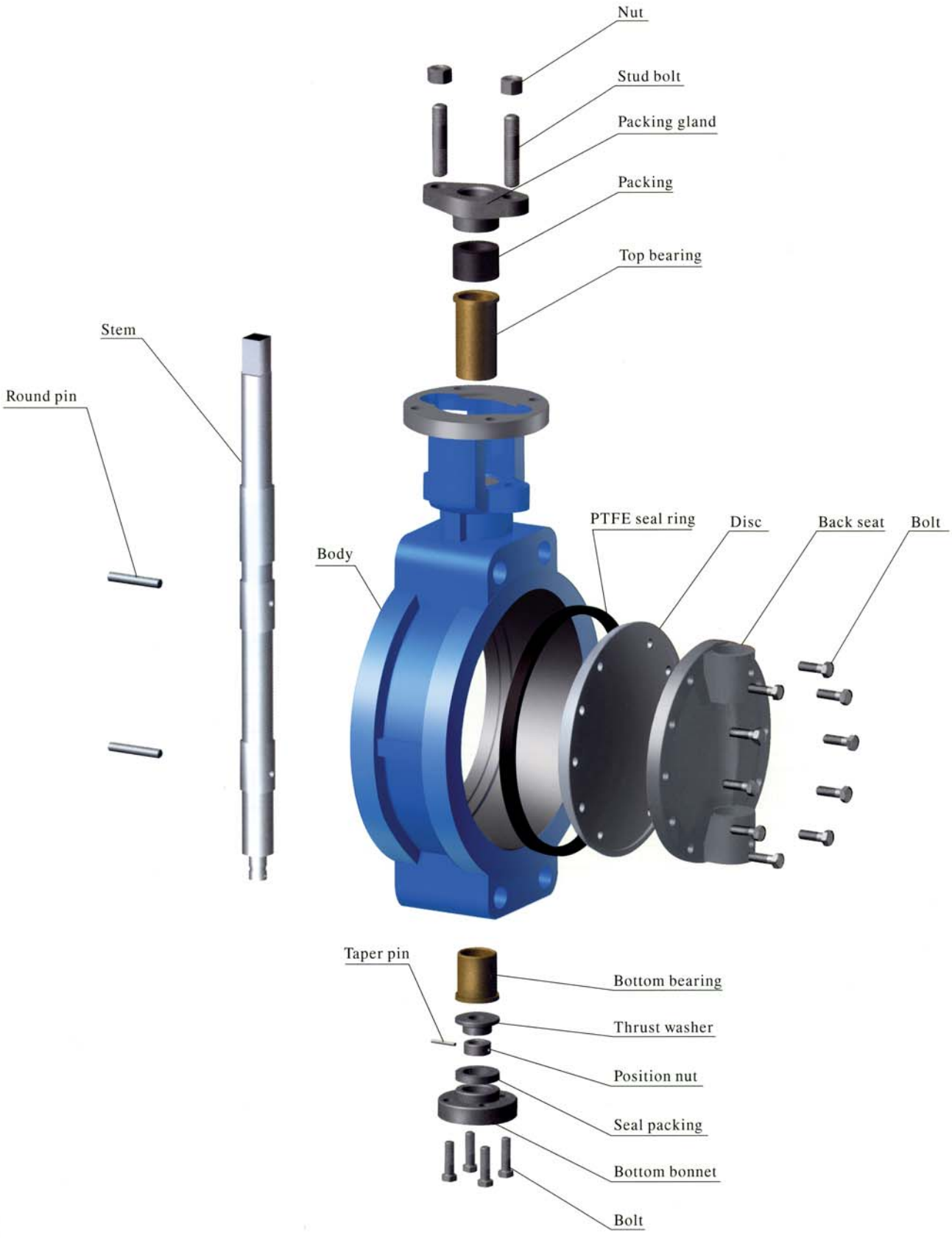

Typical drawings

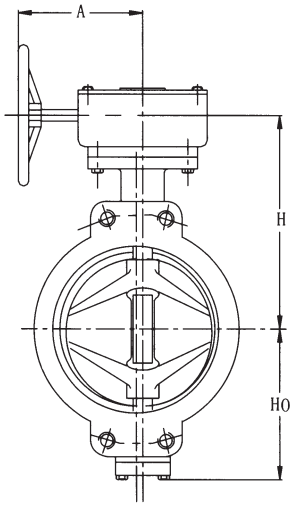

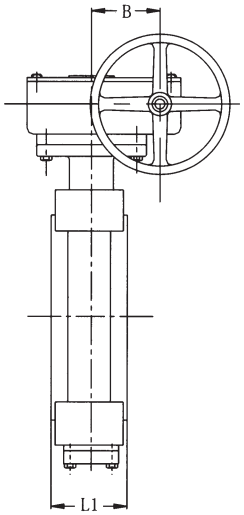

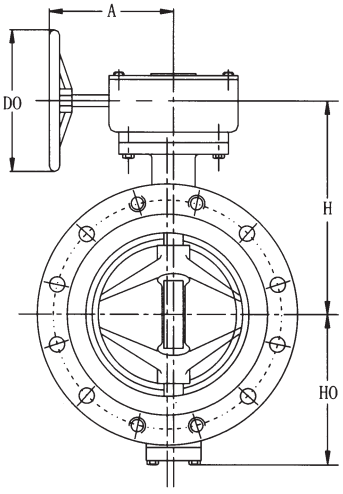

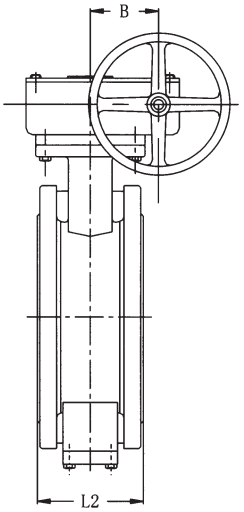

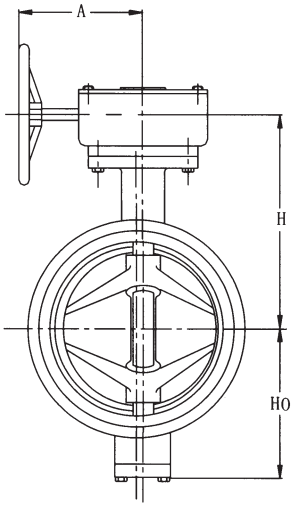

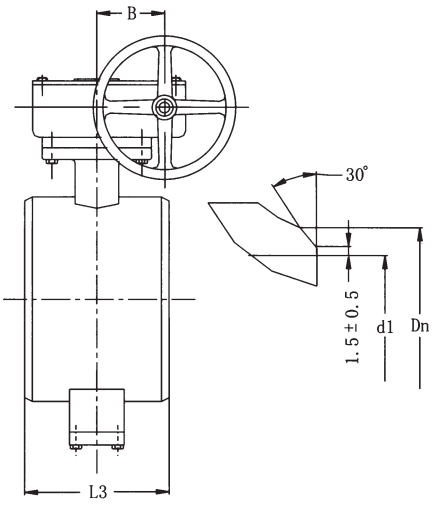

Main Dimensions

PN 0.6 Mpa PN 1.0 Mpa PN 1.6 Mpa Class 150

Nominal Dia.		L1	L2	L3	Dn	d1	H	H0	A	B	D0	W.T. (Kg)		
mm	in	(WA)	(RF)	(BW)								L1	L2	L3
50	2	42	108	---	---	---	162	112	195	45	152	5	6	---
65	2 ½	44	112	---	---	---	179	115	195	45	152	7	8	---
80	3	50	114	180	89	82	186	90	195	45	152	22	30	27
100	4	54	127	190	108	100	217	100	195	45	152	29	38	32
125	5	60	140	200	133	125	233	113	195	45	200	31	45	39
150	6	60	140	210	159	150	263	130	325	66	305	32	48	40
200	8	64	92	230	219	207	355	206	325	66	305	62	90	77
250	10	71	116	250	273	261	388	233	315	78	305	93	114	96
300	12	81	116	270	325	313	420	262	315	78	305	99	148	125
350	14	92	127	290	377	377	454	296	281	120	406	131	183	155
400	16	102	140	310	426	426	528	334	281	120	406	146	215	183
450	18	114	152	330	478	466	553	364	320	166	406	180	266	226
500	20	127	154	350	529	517	608	415	320	166	406	229	337	286
600	24	152	178	390	630	614	682	484	500	216	450	347	511	434
700	28	167	229	430	720	702	757	574	500	216	450	615	905	769
800	32	190	241	470	820	802	837	643	500	216	450	830	1221	1038
900	36	203	265	510	920	902	935	700	630	320	630	1071	1576	1339
1000	40	219	300	550	1020	1002	1021	796	630	320	630	1419	2090	1776
1200	42	254	360	630	1220	1200	1174	860	630	320	630	1845	2227	1977
1400	56		390	710	1420	1400	1310	885	700	320	630		2396	2182
1600	64		440	790	1620	1600	1436	1105	700	425	630		3748	3204
1800	72		490	870	1820	1800	1579	1214	700	425	630		4491	4090
2000	80		540	950	2020	2000	1723	1332	865	425	630		6154	5607
2200	88		600	1000	2220	2200	1844	1452	865	560	630		8031	7459
2400	96		660	1100	2420	2400	1968	1578	865	560	630		10046	9532
2600	104		720	1200	2620	2600	2096	1706	865	560	630		11310	10854
2800	112		790	1300	2800	2800	2232	1841	865	560	630		14400	13698
3000	120		860	1400	3320	3000	2372	1982	865	560	630		15420	14725

PN 2.5 Mpa PN 4.0 Mpa Class 300 Class 600

Nominal Dia.		L1	L2	L3	Dn	d1	H	H0	A	B	D0	W.T. (Kg)		
mm	in	(WA)	(RF)	(BW)								L1	L2	L3
80	3	50	114	180	89	82	186	90	195	45	152	24	32	27
100	4	54	127	190	108	100	217	100	195	45	152	29	40	34
125	5	59	140	200	133	125	233	113	195	45	200	36	48	41
150	6	60	140	210	159	150	263	130	325	66	305	70	51	43
200	8	73	152	230	219	207	355	206	325	66	305	102	95	81
250	10	83	165	250	273	261	388	233	315	78	305	112	120	102
300	12	92	178	270	325	313	420	262	315	78	305	142	156	132
350	14	117	190	290	377	377	454	296	281	120	406	162	193	164
400	16	133	216	310	426	426	528	334	281	120	406	198	227	193
450	18	149	222	330	478	466	553	364	320	166	406	251	280	238
500	20	162	229	350	529	517	608	415	320	166	406	378	355	330
600	24	184	267	390	630	614	682	484	500	216	450	654	538	460
700	28	229	292	430	720	702	757	574	500	216	450	910	953	830
750	30	241	318	470	770	752	777	621	500	216	450	1105	1197	1003
800	32	241	318	470	820	802	837	643	500	216	450	1180	1286	1100
900	36	286	330	510	920	902	935	700	630	320	630	158	1659	1450
1000	40	300	410	550	1020	1002	1021	796	630	320	630	1990	2200	1910

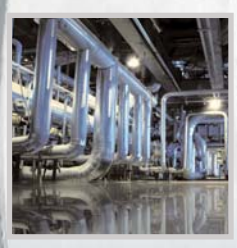

CERTIFICATE OF APPROVAL

This is to certify that the Quality Management System of:

TTV
Leganés, Madrid
Spain

has been approved by Lloyd's Register Quality Assurance to the following Quality Management System Standards:

ISO 9001:2000

The Quality Management System is applicable to:

Design and manufacture of butterfly valves.

Approval Certificate No: SGI 2202326

Original Approval: 12 December 2002
Current Certificate: 26 December 2006
Certificate Expiry: 25 December 2009

Issued by: LRQA, Ltd. Operaciones España

UKAS QUALITY MANAGEMENT 001

Este documento está sujeto a los términos y condiciones que aparecen al dorso
71 Fenchurch Street, London EC3M 4BS United Kingdom. Registration number 1879370
Esta aprobación está condicionada a que la compañía mantenga el sistema de acuerdo con las normas establecidas, lo que será monitorizado por LRQA.
El uso de la Marca de Acreditación UKAS indica Acreditación con respecto a aquellas actividades cubiertas por el Certificado de Acreditación 001

UKAS 001 · CERTIgaz CERTIFICAT NF ROB-GAZ · Volkswagen SILICONE FREE VALVES CERTIFICATION CAR INDUSTRY · OTAN'S SUPPLIER CODE 286B · Lloyd's Register EC TECHNICAL FILE RECEIPT CE Ex II 2 GD c · СЕРТИФИКАТ СООТВЕТСТВИЯ

MARQUE DE PARIS 02ACC. PA . 006 POTABLE WATER 02ACC . PA . 007 CERTIFICATION · DNV CERTIFICATE NO. 02 - 237094 CE · Lloyd's Register TYPE APPROVAL 99/00131 MARINE, OFFSHORE AND INDUSTRIAL · BUREAU VERITAS TYPE APPROVAL MARINE DIVISION

BUTTERFLY VALVES