NEUMIRA

# INDICE / INDEX

***Bridas s/norma ASME B16.47**
**Flanges according to ASME B16.47 standars**

RTJ - Junta Anillo Octogonal (300 - 900Lb.)
RTJ - Octogonal Ring Joint (300 - 900Lb.)

Espesores/Diámetro interior de tubos sin soldadura y soldados
Wall Thickness/Inside diameter of seamless and welded steel pipe

Tolerancias
Tolerances

Acabado de cara de junta
Gastet surface finishes

Extremos de soldadura (bridas Welding Neck)
Welding ends (Welding Neck Flanges)

| TIPO DE BRIDA<br>FLANGE TYPE | SERIES | Presión Nominal / Rated pressure (Lb./inch²) | | | | | |
|---|---|---|---|---|---|---|---|
| | | 75 | 150 | 300 | 400 | 600 | 900 |
| **Bridas Welding Neck**<br>**Welding Neck Flanges** | **A** | | **26"**<br>**60"** | **26"**<br>**60"** | **26"**<br>**60"** | **26"**<br>**60"** | **26"**<br>**48"** |
| **Bridas Blind**<br>**Blind Flanges** | **A** | | **26"**<br>**60"** | **26"**<br>**60"** | **26"**<br>**60"** | **26"**<br>**60"** | **26"**<br>**48"** |
| **Bridas Welding Neck**<br>**Welding Neck Flanges** | **B** | **26"**<br>**60"** | **26"**<br>**60"** | **26"**<br>**60"** | **26"**<br>**60"** | **26"**<br>**60"** | **26"**<br>**48"** |
| **Bridas Blind**<br>**Blind Flanges** | **B** | **26"**<br>**60"** | **26"**<br>**60"** | **26"**<br>**60"** | **26"**<br>**60"** | **26"**<br>**60"** | **26"**<br>**48"** |

Especificación de materiales
Material Specification

***Bridas s/norma BS 3293**
**Flanges according to BS 3293 standars**

RTJ - Junta Anillo Octogonal (400 - 600Lb.)
RTJ - Octogonal Ring Joint (400 - 600Lb.)

Tolerancias
Tolerances

| TIPO DE BRIDA<br>FLANGE TYPE | Presión Nominal / Rated pressure (Lb./inch²) | | | |
|---|---|---|---|---|
| | 150 | 300 | 400 | 600 |
| **Bridas Welding Neck**<br>**Welding Neck Flanges** | **26"**<br>**48"** | **26"**<br>**36"** | **26"**<br>**36"** | **26"**<br>**36"** |
| **Bridas Welding Neck tipo Ring Joint**<br>**Welding Neck Flanges Ring Joint Type** | | **26"**<br>**36"** | **26"**<br>**36"** | **26"**<br>**36"** |
| **Bridas Slip-On**<br>**Slip-On Flanges** | **26"**<br>**48"** | **26"**<br>**36"** | **26"**<br>**36"** | **26"**<br>**36"** |
| **Bridas Slip-On tipo Ring Joint**<br>**Slip-On Flanges Ring Joint Type** | | **26"**<br>**36"** | **26"**<br>**36"** | **26"**<br>**36"** |

Especificación de materiales
Material Specification

NEUMIRA

# *ASME B16.47 FLANGES*

NEUMIRA

NEUMIRA

# CARA DE JUNTA TIPO RING JOINT
# RING JOINT FACINGS

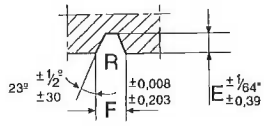


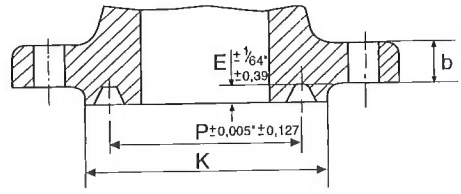


**ASME B 1647 - 1996**

| Diámetro nominal del tubo<br>Nominal Pipe Size | | | | Nº del Canal<br>Groove Number | Diámetro del resalte<br>Diameter raised face | Dimensiones del canal<br>Groove dimensions | | | |
|---|---|---|---|---|---|---|---|---|---|
| | | | | | | Profund<br>Depth | Pitch<br>Diam. | Espesor<br>Width | Radio<br>Radius |
| 300 lb | 400 lb | 600 lb | 900 lb | | K<br>mm<br>inches | E<br>mm<br>inches | P<br>mm<br>inches | F<br>mm<br>inches | R<br>mm<br>inches |
| 26 | 26 | 26 | | R 93 | 809,62<br>31,88 | 12,70<br>0,500 | 749,30<br>29,50 | 19,84<br>0,781 | 1,52<br>0,06 |
| 28 | 28 | 28 | | R 94 | 860,42<br>33,88 | 12,70<br>0,500 | 800,10<br>31,50 | 19,84<br>0,781 | 1,52<br>0,06 |
| 30 | 30 | 30 | | R 95 | 917,57<br>36,12 | 12,70<br>0,500 | 857,25<br>33,75 | 19,84<br>0,781 | 1,52<br>0,06 |
| 32 | 32 | 32 | | R 96 | 984,25<br>38,75 | 14,28<br>0,562 | 914,40<br>36 | 23,02<br>0,906 | 1,52<br>0,06 |
| 34 | 34 | 34 | | R 97 | 1.035,05<br>40,75 | 14,28<br>0,562 | 965,20<br>38 | 23,02<br>0,906 | 1,52<br>0,06 |
| 36 | 36 | 36 | | R 98 | 1.092,20<br>43 | 14,28<br>0,562 | 1.022,35<br>40,25 | 23,02<br>0,906 | 1,52<br>0,06 |
| | | | 26 | R 100 | 831,85<br>32,75 | 17,46<br>0,688 | 749,30<br>29,50 | 30,16<br>1,188 | 2,29<br>0,09 |
| | | | 28 | R 101 | 889<br>35 | 17,46<br>0,688 | 800,10<br>31,50 | 33,33<br>1,312 | 2,29<br>0,09 |
| | | | 30 | R 102 | 946,15<br>37,25 | 17,46<br>0,688 | 857,25<br>33,75 | 33,33<br>1,312 | 2,29<br>0,09 |
| | | | 32 | R 103 | 1.003,30<br>39,50 | 17,46<br>0,688 | 914,40<br>36 | 33,33<br>1,312 | 2,29<br>0,09 |
| | | | 34 | R 104 | 1.066,80<br>42 | 20,63<br>0,812 | 965,20<br>38 | 36,51<br>1,438 | 2,29<br>0,09 |
| | | | 36 | R 105 | 1.123,95<br>44,25 | 20,63<br>0,812 | 1.022,35<br>40,25 | 36,51<br>1,438 | 2,29<br>0,09 |

NEUMIRA

## ESPESORES DE TUBO SIN SOLDADURA Y SOLDADOS
## WALL THICKNESS OF SEAMLESS AND WELDED STEEL PIPE
**(espesores / wall thickness: mm - inch, peso/weight: Kg/m)**

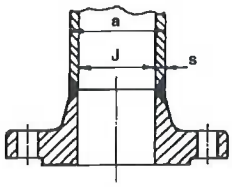


**ANSI B36.10M - 1985 / ANSI B36.19M - 1985**

| Diámetro Nominal Nominal Pipe Size | Diámetro Externo Outside Diameter mm/inch | Sch. 5s mm inch Kg/m | Sch. 5 mm inch Kg/m | Sch. 10s mm inch Kg/m | Sch. 10 mm inch Kg/m | Sch. 20 mm inch Kg/m | Sch. 30 mm inch Kg/m | STD 40s mm inch Kg/m | Sch. 40 mm inch Kg/m | Sch. 60 mm inch Kg/m | XS 80s mm inch Kg/m | Sch. 80 mm inch Kg/m | Sch. 100 mm inch Kg/m | Sch. 120 mm inch Kg/m | Sch. 140 mm inch Kg/m | Sch. 160 mm inch Kg/m | XXS mm inch Kg/m |
|---|---|---|---|---|---|---|---|---|---|---|---|---|---|---|---|---|---|
| 26" | 660<br>26 | | | | 7,92<br>0,312<br>127,36 | 12,70<br>0,500<br>202,72 | | 9,53<br>0,375<br>152,87 | | | 12,70<br>0,500<br>202,72 | | | | | | |
| 28" | 711<br>28 | | | | 7,92<br>0,312<br>137,32 | 12,70<br>0,500<br>218,69 | 15,88<br>0,625<br>271,21 | 9,53<br>0,375<br>164,85 | | | 12,70<br>0,500<br>218,69 | | | | | | |
| 30" | 762<br>30 | | | | 7,92<br>0,312<br>147,28 | 12,70<br>0,500<br>234,67 | 15,88<br>0,625<br>292,18 | 9,53<br>0,375<br>176,84 | | | 12,70<br>0,500<br>234,67 | | | | | | |
| 32" | 813<br>32 | | | | 7,92<br>0,312<br>157,24 | 12,70<br>0,500<br>250,64 | 15,88<br>0,625<br>312,15 | 9,53<br>0,375<br>188,82 | 17,48<br>0,688<br>342,91 | | 12,70<br>0,500<br>250,64 | | | | | | |
| 34" | 864<br>34 | | | | 7,92<br>0,312<br>167,20 | 12,70<br>0,500<br>266,61 | 15,88<br>0,625<br>332,12 | 9,53<br>0,375<br>200,31 | 17,48<br>0,688<br>364,90 | | 12,70<br>0,500<br>266,61 | | | | | | |
| 36" | 914<br>36 | | | | 7,92<br>0,312<br>176,96 | 12,70<br>0,500<br>282,27 | 15,88<br>0,625<br>351,70 | 9,53<br>0,375<br>212,56 | 19,05<br>0,750<br>420,42 | | 12,70<br>0,500<br>282,27 | | | | | | |
| 38" | 965<br>38 | | | | | | | 9,53<br>0,375<br>224,54 | | | 12,70<br>0,500<br>298,24 | | | | | | |
| 40" | 1016<br>40 | | | | | | | 9,53<br>0,375<br>236,53 | | | 12,70<br>0,500<br>314,22 | | | | | | |
| 42" | 1067<br>42 | | | | | | | 9,53<br>0,375<br>248,52 | | | 12,70<br>0,500<br>330,19 | | | | | | |
| 44" | 1118<br>44 | | | | | | | 9,53<br>0,375<br>260,50 | | | 12,70<br>0,500<br>346,16 | | | | | | |
| 46" | 1168<br>46 | | | | | | | 9,53<br>0,375<br>272,25 | | | 12,70<br>0,500<br>351,82 | | | | | | |
| 48" | 1219<br>48 | | | | | | | 9,53<br>0,375<br>284,24 | | | 12,70<br>0,500<br>377,79 | | | | | | |
| 52" | 1321<br>52 | | | | | | | 9,53<br>0,375<br>308,21 | | | 12,70<br>0,500<br>409,64 | | | | | | |
| 56" | 1422<br>56 | | | | | | | 9,53<br>0,375<br>331,94 | | | 12,70<br>0,500<br>441,37 | | | | | | |
| 60" | 1524<br>60 | | | | | | | 9,53<br>0,375<br>355,92 | | | 12,70<br>0,500<br>473,31 | | | | | | |

NEUMIRA

# DIÁMETRO INTERIOR DE TUBOS SIN SOLDADURA Y SOLDADOS
# INSIDE DIAMETER OF SEAMLESS AND WELDED STEEL PIPE
## (diámetro interior / inside diameter: mm - inch, peso/weight: Kg/m)

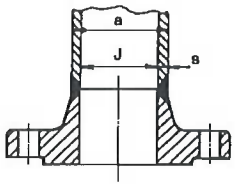


**ANSI B36.10M - 1985 / ANSI B36.19M - 1985**

| Diámetro Nominal Nominal Pipe Size | Diámetro Externo Outside Diameter mm/inch | Sch. 5s mm inch Kg/m | Sch. 5 mm inch Kg/m | Sch. 10s mm inch Kg/m | Sch. 10 mm inch Kg/m | Sch. 20 mm inch Kg/m | Sch. 30 mm inch Kg/m | STD 40s mm inch Kg/m | Sch. 40 mm inch Kg/m | Sch. 60 mm inch Kg/m | XS 80s mm inch Kg/m | Sch. 80 mm inch Kg/m | Sch. 100 mm inch Kg/m | Sch. 120 mm inch Kg/m | Sch. 140 mm inch Kg/m | Sch. 160 mm inch Kg/m | XXS mm inch Kg/m |
|---|---|---|---|---|---|---|---|---|---|---|---|---|---|---|---|---|---|
| 26" | 660<br>26 | | | | 644,16<br>25,376<br>127,36 | 634,6<br>25<br>202,72 | | 640,94<br>25,25<br>152,87 | | | 634,6<br>25<br>202,72 | | | | | | |
| 28" | 711<br>28 | | | | 659,16<br>27,376<br>137,32 | 685,6<br>27<br>218,69 | 679,24<br>26,75<br>271,21 | 691,94<br>27,25<br>164,85 | | | 685,6<br>27<br>218,69 | | | | | | |
| 30" | 762<br>30 | | | | 746,16<br>29,376<br>147,28 | 736,6<br>29<br>234,67 | 730,24<br>28,75<br>292,18 | 742,94<br>29,25<br>176,84 | | | 736,6<br>29<br>234,67 | | | | | | |
| 32" | 813<br>32 | | | | 797,16<br>31,376<br>157,24 | 787,6<br>31<br>250,64 | 781,24<br>30,75<br>312,15 | 793,94<br>31,25<br>188,82 | 778,04<br>30,62<br>342,91 | | 787,6<br>31<br>250,64 | | | | | | |
| 34" | 864<br>34 | | | | 848,16<br>33,376<br>167,20 | 838,6<br>33<br>266,61 | 832,24<br>32,75<br>332,12 | 844,94<br>33,25<br>200,31 | 829,04<br>32,624<br>364,90 | | 838,6<br>33<br>266,61 | | | | | | |
| 36" | 914<br>36 | | | | 898,16<br>35,376<br>176,96 | 888,6<br>35<br>282,27 | 882,24<br>34,75<br>351,70 | 894,94<br>35,25<br>212,56 | 875,9<br>34,5<br>420,42 | | 888,6<br>35<br>282,27 | | | | | | |
| 38" | 965<br>38 | | | | | | | 945,94<br>37,25<br>224,54 | | | 939,6<br>37<br>298,24 | | | | | | |
| 40" | 1016<br>40 | | | | | | | 996,94<br>39,25<br>236,53 | | | 990,6<br>39<br>314,22 | | | | | | |
| 42" | 1067<br>42 | | | | | | | 1047,94<br>41,25<br>248,52 | | | 1041,6<br>41<br>330,19 | | | | | | |
| 44" | 1118<br>44 | | | | | | | 1098,94<br>43,25<br>260,50 | | | 1092,6<br>43<br>346,16 | | | | | | |
| 46" | 1168<br>46 | | | | | | | 1148,94<br>45,25<br>272,25 | | | 1142,6<br>45<br>351,82 | | | | | | |
| 48" | 1219<br>48 | | | | | | | 1199,94<br>47,25<br>284,24 | | | 1193,6<br>47<br>377,79 | | | | | | |
| 52" | 1321<br>52 | | | | | | | 1301,94<br>51,25<br>308,21 | | | 1295,6<br>51<br>409,64 | | | | | | |
| 56" | 1422<br>56 | | | | | | | 1402,94<br>55,25<br>331,94 | | | 1396,6<br>55<br>441,37 | | | | | | |
| 60" | 1524<br>60 | | | | | | | 1504,94<br>59,25<br>355,92 | | | 1498,6<br>59<br>473,31 | | | | | | |

NEUMIRA

# TOLERANCIAS
## (Bridas Welding Neck y Blind)
# TOLERANCES
## (Welding Neck and Blind Flanges)

### SERIE A:

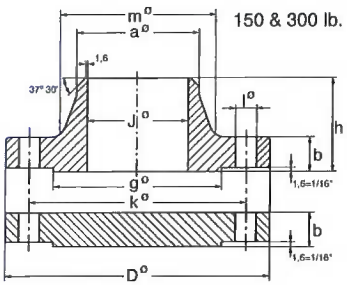


150 & 300 lb.

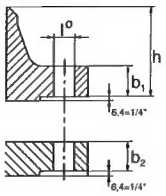


400, 600, 900 lb.

### SERIE B:

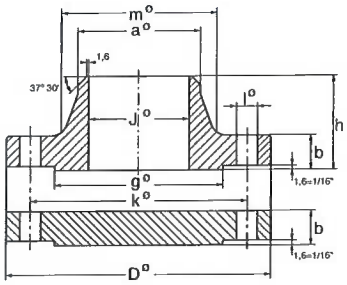


ASME B16.47 - 1996

| DIMENSIONES<br>DIMENSION | | CLASE<br>CLASS | TOLERANCIAS / TOLERANCES<br>Inches | <br>mm |
|---|---|---|---|---|
| D | Diámetro exterior *<br>Outside diameter * | | ± 0.12" | ± 3,20 mm |
| J | Diámetro interior<br>Inside diameter | | + 0.12", - 0.06" | + 3,20 mm - 1,60 mm |
| g | Diámetro de la cara de contacto (resalte)<br>Diameter of Contact Face | 1,60 mm (0.06") Raised face | ± 0,08" | ± 2 mm |
| | | 6,40 mm (0.25") Raised Face Tongue & Grove, Male & Female | ± 0,04" | ± 1 mm |
| m | Diámetro exterior del cuello en la base *<br>Outside diameter of hub at base * | | ± 0.12" | ± 3,20 mm |
| a | Diámetro del cuello en el Punto de soldadura<br>Diameter of hub at point of welding | | ± 0.21", - 0.06" | + 5,30 mm - 1,60 mm |
| K | Diámetro del círculo de Taladros<br>Bolt circle Diameter | | ± 0.06" | ± 1,60 mm |
| | Distancia entre centros de Taladros adyacentes<br>Center to center of adyacent Bolt holes | | ± 0.03" | ± 0.80 mm |
| | Excentricidad entre el Ø del círculo de taladros y los diámetros de la cara de junta.<br>Excentricity between bolt circle diameter and machined facing diameters. | | ± 0.06" | ± 1,60 mm |
| l | Taladro *<br>Drilling * | | ± 0.03" | ± 0,80 mm |
| h | Altura total de la brida.<br>Overall Length through Hub. | | ± 0,19" | ± 4,80 mm |
| b | Espesor<br>Thickness | To 1" | + 0.12, -0 | + 3,20 mm - 0 mm |
| | | 1.0" - 2.0" | + 0.19, -0 | + 4,80 mm - 0 mm |
| | | 2.0" - 3.0" | + 0.31, -0 | + 7,80 mm - 0 mm |
| | | Over 3.0" | + 0.38, -0 | + 9,60 mm - 0 mm |

* Esta tolerancia no está incluida en ASME B16.47 - 1996

* This tolerance is not covered by ASME B16.47 - 1996

NEUMIRA

## ACABADO DE CARA DE JUNTA
## GASKET SURFACE FINISHES

**MSS - SP 6**

| Nº | DENOMINACIÓN<br>DENOMINATION | Ø<br>NOMINAL<br>N.P.S. | TIPO<br>TYPE | PERFIL (mm)<br>PROFILE |
|---|---|---|---|---|
| 1 | STOCK FINISH | ≤ 12" | Espiral<br>Spiral | 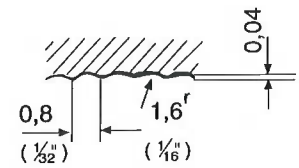 |
| | | ≥ 14" | Espiral<br>Spiral | 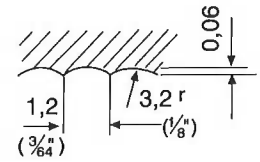 |
| 2 | SPIRAL SERRATED | Para todas las medidas<br>For all dimensions | Espiral<br>Spiral | 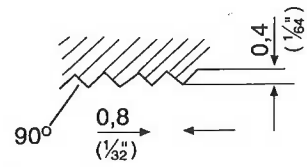 |
| 3 | CONCENTRIC SERRATED | Para todas las medidas<br>For all dimensions | Concéntrico<br>Concentric | 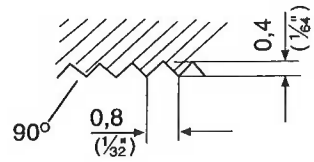 |
| 4 | SMOOTH FINISH | Para todas las medidas<br>For all dimensions | – | 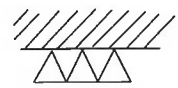 |
| 5 | COLD WATER FINISH | Para todas las medidas<br>For all dimensions | – | 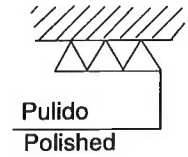 |

NEUMIRA

# EXTREMOS DE SOLDADURA
## (Bridas Welding Neck)
# WELDING ENDS
## (Welding Neck Flanges)

**ASME B16.47 - 1996**

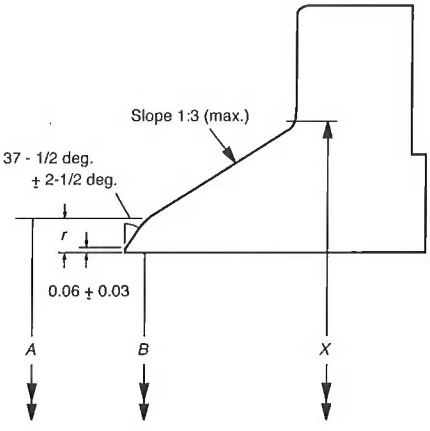


BISELADO PARA ESPESOR DE PARED (t)
DE 4,8 mm A 22,3 mm INCLUSIVE.

BEVEL FOR WALL THICKNESSES (t) FROM
0.19 in. TO 0.88 in., INCLUSIVE [1-3]

A = Diámetro exterior de la tubería.
B = Diámetro interior de la tubería.
t = Espesor de pared de la tubería.

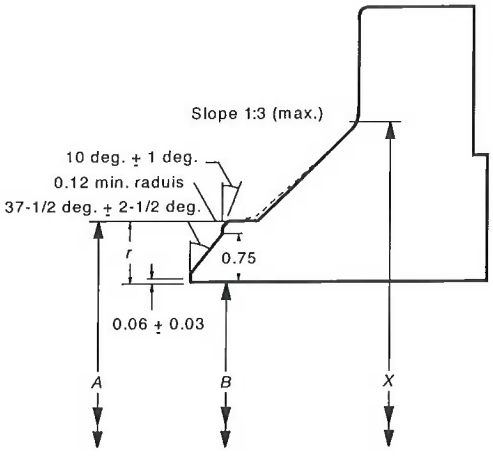


BISELADO PARA ESPESOR DE PARED (t)
MAYOR DE 22,3 mm

BEVEL FOR WALL THICKNESSES (t)
GREATER THAN 0.88 in.[1-3]

A = Nominal outside diameter of pipe, in.
B = Nominal inside diameter of pipe, in.
t = Nominal wall thickness of pipe, in.

BISEL PARA SOLDAR A TUBERÍAS DE ALTA RESISTENCIA
BEVEL FOR WELDING TO HIGHER STRENGTH PIPE

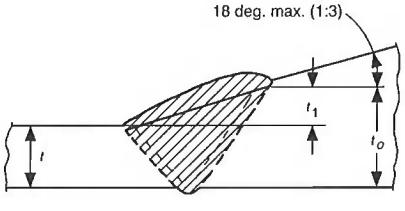


BISELADO PARA SOBREESPESOR EXTERIOR
BEVEL FOR OUTSIDE THICKNESS

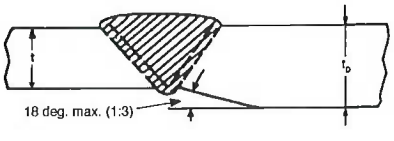


BISELADO PARA SOBREESPESOR INTERIOR
BEVEL FOR INSIDE THICKNESS

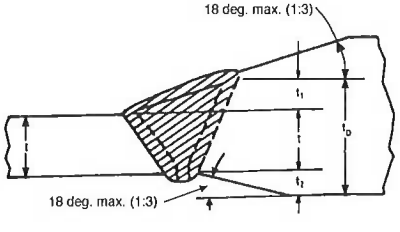


BISELADO PARA SOBREESPESOR COMBINADO
BEVEL FOR COMBINED THICKNESS

NEUMIRA

## EXTREMOS DE SOLDADURA
## (Bridas welding. Neck con anillo de respaldo)
## WELDING ENDS
## (Welding Neck Flanges with backing rings)

ASME B16.47 - 1996

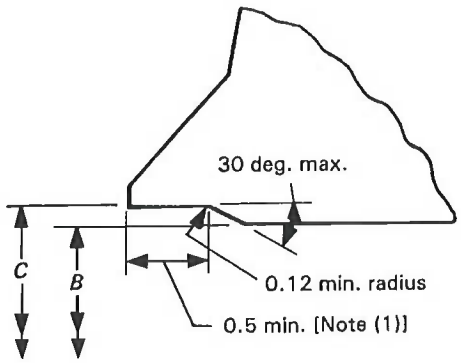


CONTORNO INTERIOR PARA USO
CON ANILLO DE RESPALDO RECTANGULAR

INSIDE CONTOUR FOR USE WITH
RECTANGULAR BACKING RING

A = Diámetro exterior de la soldadura.
B = Diámetro interior de la tubería.
t = Espesor de pared de la tubería.

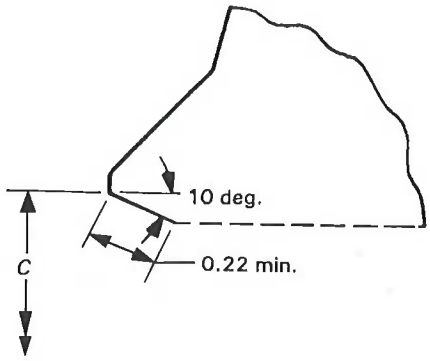


CONTORNO INTERIOR PARA USO CON
ANILLO DE RESPALDO INCLINADO

INSIDE CONTOUR FOR USE WITH
TAPER BACKING RING

A = Nominal outside diameter of welding end, in.
B = Nominal inside diameter of pipe.
t = Nominal wall thickness of pipe, in.

NEUMIRA

## BRIDAS WELDING NECK Y BLIND
## WELDING NECK AND BLIND FLANGES
## 150 Lbs.

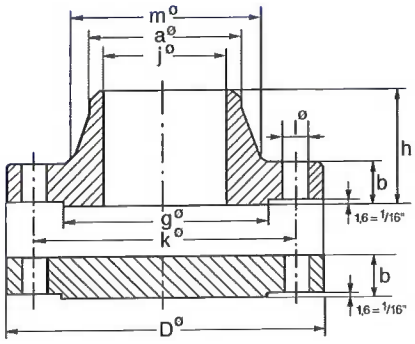


**ASME B16.47 - 1996. Serie A**

| Diámetro nominal del tubo Nominal Pipe size | Brida Flange | | | | Cuello Hub | | Resalte Raised face | Taladros Drilling template | | | Peso aprox. Approx. weight kg. Pounds | |
|---|---|---|---|---|---|---|---|---|---|---|---|---|
| | D mm inches | J mm inches | b mm inches | h mm inches | a mm inches | m mm inches | g mm inches | Número Number | l mm inches | k mm inches | Welding Neck | Blind |
| 26" | 869,9<br>34,25 | Debe ser especificado por el comprador<br>To be specified by purchaser | 68,3<br>2,69 | 120,6<br>4,75 | 660,4<br>26 | 676,3<br>26,62 | 749,3<br>29,50 | 24 | 34,9<br>1,38 | 806,4<br>31,75 | 147<br>324 | 306<br>675 |
| 28" | 927,1<br>36,50 | | 71,4<br>2,81 | 125,4<br>4,94 | 711,2<br>28 | 727,1<br>28,62 | 800,1<br>31,50 | 28 | 34,9<br>1,38 | 863,6<br>34 | 163<br>360 | 363<br>800 |
| 30" | 984,2<br>38,75 | | 74,6<br>2,94 | 136,5<br>5,38 | 762<br>30 | 781<br>30,75 | 857,2<br>33,75 | 28 | 34,9<br>1,38 | 914,4<br>36 | 190<br>419 | 430<br>948 |
| 32" | 1.060,4<br>41,75 | | 81<br>3,19 | 144,5<br>5,69 | 812,8<br>32 | 831,8<br>32,75 | 914,4<br>36 | 28 | 41,3<br>1,62 | 977,8<br>38,50 | 238<br>525 | 537<br>1,184 |
| 34" | 1.111,2<br>43,75 | | 82,5<br>3,25 | 149,2<br>5,88 | 863,6<br>34 | 882,6<br>34,75 | 965,2<br>38 | 32 | 41,3<br>1,62 | 1.028,7<br>40,50 | 255<br>562 | 600<br>1,323 |
| 36" | 1.168,4<br>46 | | 90,5<br>3,56 | 157,2<br>6,19 | 914,4<br>36 | 933,4<br>36,75 | 1.022,3<br>40,25 | 32 | 41,3<br>1,62 | 1.085,8<br>42,75 | 302<br>665 | 730<br>1,609 |
| 38" | 1.238,2<br>48,75 | | 87,3<br>3,44 | 157,2<br>6,19 | 965,2<br>38 | 990,6<br>39 | 1.073,2<br>42,25 | 32 | 41,3<br>1,62 | 1.149,4<br>45,25 | 342<br>754 | 792<br>1,748 |
| 40" | 1.289,0<br>50,75 | | 90,5<br>3,56 | 163,5<br>6,44 | 1.016,0<br>40 | 1.041,4<br>41 | 1.124,0<br>44,25 | 36 | 41,3<br>1,62 | 1.200,1<br>47,25 | 366<br>807 | 893<br>1,968 |
| 42" | 1.346,2<br>53 | | 96,8<br>3,81 | 171,5<br>6,75 | 1.066,8<br>42 | 1.092,2<br>43 | 1.193,8<br>47 | 36 | 41,3<br>1,62 | 1.257,3<br>49,50 | 419<br>924 | 1.044<br>2,303 |
| 44" | 1.403,4<br>55,25 | | 101,6<br>4 | 177,8<br>7 | 1.117,6<br>44 | 1.143,0<br>45 | 1.244,6<br>49 | 40 | 41,3<br>1,62 | 1.314,5<br>51,75 | 459<br>1,012 | 1.190<br>2,623 |
| 46" | 1.454,2<br>57,25 | | 103,2<br>4,06 | 185,7<br>7,31 | 1.168,4<br>46 | 1.197,0<br>47,12 | 1.295,4<br>51 | 40 | 41,3<br>1,62 | 1.365,2<br>53,75 | 500<br>1,102 | 1.299<br>2,864 |
| 48" | 1.511,3<br>59,50 | | 108,0<br>4,25 | 192,1<br>7,56 | 1.219,2<br>48 | 1.247,8<br>49,12 | 1.358,9<br>53,50 | 44 | 41,3<br>1,62 | 1.422,4<br>56 | 552<br>1,217 | 1.470<br>3,240 |
| 50" | 1.568,5<br>61,75 | | 111,1<br>4,38 | 203,2<br>8 | 1.270,0<br>50 | 1.301,8<br>51,25 | 1.409,7<br>55,50 | 44 | 47,6<br>1,88 | 1.479,5<br>58,25 | 592<br>1,305 | 1.615<br>3,560 |
| 52" | 1.625,6<br>64 | | 115,9<br>4,56 | 209,6<br>8,25 | 1.320,8<br>52 | 1.352,6<br>53,25 | 1.460,5<br>57,50 | 44 | 47,6<br>1,88 | 1.536,7<br>60,50 | 660<br>1,455 | 1.817<br>4,006 |
| 54" | 1.682,8<br>66,25 | | 120,6<br>4,75 | 215,9<br>8,50 | 1.371,6<br>54 | 1.403,4<br>55,25 | 1.511,3<br>59,50 | 44 | 47,6<br>1,88 | 1.593,9<br>62,75 | 726<br>1,600 | 2.031<br>4,478 |
| 56" | 1.746,2<br>68,75 | | 123,8<br>4,88 | 228,6<br>9 | 1.422,4<br>56 | 1.457,3<br>57,38 | 1.574,8<br>62 | 48 | 47,6<br>1,88 | 1.651,0<br>65 | 805<br>1,775 | 2.244<br>4,947 |
| 58" | 1.803,4<br>71 | | 128,6<br>5,06 | 235,0<br>9,25 | 1.473,2<br>58 | 1.508,1<br>59,38 | 1.625,6<br>64 | 48 | 47,6<br>1,88 | 1.708,2<br>67,25 | 884<br>1,949 | 2.491<br>5,492 |
| 60" | 1.854,2<br>73 | | 131,8<br>5,19 | 239,7<br>9,44 | 1.524,0<br>60 | 1.559,0<br>61,38 | 1.676,4<br>66 | 52 | 47,6<br>1,88 | 1.759,0<br>69,25 | 930<br>2,050 | 2.697<br>5,946 |

NEUMIRA

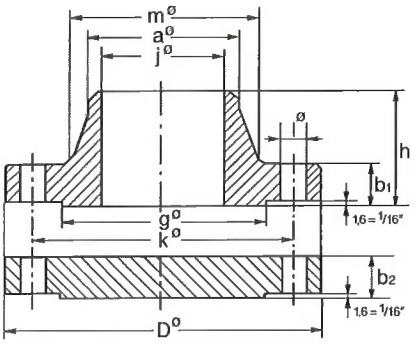


# BRIDAS WELDING NECK Y BLIND
# WELDING NECK AND BLIND FLANGES
# 300 Lbs.

ASME B16.47 - 1996. Serie A

| Diámetro nominal del tubo Nominal Pipe size | Brida Flange | | | | | Cuello Hub | | Resalte Raised face | Taladros Drilling template | | | Peso aprox. Approx. weight kg. Pounds | |
|---|---|---|---|---|---|---|---|---|---|---|---|---|---|
| | D mm inches | J mm inches | Welding neck $b_1$ mm inches | Blind $b_2$ mm inches | h mm inches | a mm inches | m mm inches | g mm inches | Número Number | l mm inches | k mm inches | Welding Neck | Blind |
| 26" | 971,5<br>38,25 | Debe ser especificado por el comprador<br>To be specified by purchaser | 79,4<br>3,12 | 84,1<br>3,31 | 184,1<br>7,25 | 660,4<br>26 | 720,7<br>28,38 | 749,3<br>29,50 | 28 | 44,5<br>1,75 | 876,3<br>34,50 | 275<br>606 | 460<br>1,014 |
| 28" | 1.035<br>40,75 | | 85,7<br>3,38 | 90,5<br>3,56 | 196,8<br>7,75 | 711,2<br>28 | 774,7<br>30,50 | 800,1<br>31,50 | 28 | 44,5<br>1,75 | 939,8<br>37 | 340<br>750 | 566<br>1,248 |
| 30" | 1.092,2<br>43 | | 92,1<br>3,62 | 95,2<br>3,75 | 209,5<br>8,25 | 762<br>30 | 827,1<br>32,56 | 857,3<br>33,75 | 28 | 47,6<br>1,88 | 997<br>39,25 | 389<br>858 | 663<br>1,462 |
| 32" | 1.149,4<br>45,25 | | 98,4<br>3,88 | 100<br>3,94 | 222,3<br>8,75 | 812,8<br>32 | 881,1<br>34,69 | 914,4<br>36 | 28 | 50,8<br>2 | 1.054,1<br>41,50 | 438<br>966 | 770<br>1,697 |
| 34" | 1.206,5<br>47,50 | | 101,6<br>4 | 104,8<br>4,12 | 231,8<br>9,12 | 863,6<br>34 | 936,6<br>36,88 | 965,2<br>38 | 28 | 50,8<br>2 | 1.104,9<br>43,50 | 498<br>1,098 | 894<br>1,971 |
| 36" | 1.270<br>50 | | 104,8<br>4,12 | 111,1<br>4,38 | 241,3<br>9,50 | 914,4<br>36 | 990,6<br>39 | 1.022,3<br>40,25 | 32 | 54<br>2,12 | 1.168,4<br>46 | 563<br>1,241 | 1.040<br>2,294 |
| 38" | 1.168,4<br>46 | | 108<br>4,25 | 108<br>4,25 | 181<br>7,12 | 965,2<br>38 | 993,8<br>39,12 | 1.028,7<br>40,50 | 32 | 41,3<br>1,62 | 1.092,2<br>43 | 307<br>677 | 872<br>1,922 |
| 40" | 1.238,3<br>48,75 | | 114,3<br>4,50 | 114,3<br>4,50 | 193,7<br>7,62 | 1.016<br>40 | 1.047,8<br>41,25 | 1.085,9<br>42,75 | 32 | 44,5<br>1,75 | 1.155,7<br>45,50 | 372<br>820 | 1.035<br>2,282 |
| 42" | 1.289<br>50,75 | | 119,1<br>4,69 | 119,1<br>4,69 | 200<br>7,88 | 1.066,8<br>42 | 1.098,5<br>43,25 | 1.136,7<br>44,75 | 32 | 44,5<br>1,75 | 1.206,5<br>47,50 | 409<br>902 | 1.173<br>2,587 |
| 44" | 1.352,5<br>53,25 | | 123,8<br>4,88 | 123,8<br>4,88 | 206,4<br>8,12 | 1.117,6<br>44 | 1.149,4<br>45,25 | 1.193,8<br>47 | 32 | 47,6<br>1,88 | 1.263,7<br>49,75 | 464<br>1,023 | 1.340<br>2,954 |
| 46" | 1.416,1<br>55,75 | | 128,6<br>5,06 | 128,6<br>5,06 | 215,9<br>8,50 | 1.168,4<br>46 | 1.203,3<br>47,38 | 1.244,6<br>49 | 28 | 50,8<br>2 | 1.320,8<br>52 | 544<br>1,199 | 1.600<br>3,527 |
| 48" | 1.466,85<br>57,75 | | 133,4<br>5,25 | 133,4<br>5,25 | 223,8<br>8,81 | 1.219,2<br>48 | 1.254,1<br>49,38 | 1.301,8<br>51,25 | 32 | 50,8<br>2 | 1.371,6<br>54 | 567<br>1,250 | 1.700<br>3,748 |
| 50" | 1.530,3<br>60,25 | | 139,7<br>5,50 | 139,7<br>5,50 | 231,8<br>9,12 | 1.270<br>50 | 1.304,9<br>51,38 | 1.358,9<br>53,50 | 32 | 54<br>2,12 | 1.428,8<br>56,25 | 643<br>1,417 | 1.936<br>4,268 |
| 52" | 1.581<br>62,25 | | 144,5<br>5,69 | 144,5<br>5,69 | 238,1<br>9,38 | 1.320,8<br>52 | 1.355,7<br>53,38 | 1.409,7<br>55,50 | 32 | 54<br>2,12 | 1.479,5<br>58,25 | 694<br>1,530 | 2.143<br>4,724 |
| 54" | 1.657,4<br>65,25 | | 152,4<br>6 | 152,4<br>6 | 254,4<br>9,94 | 1.371,6<br>54 | 1.409,7<br>55,50 | 1.466,8<br>57,75 | 28 | 60,3<br>2,38 | 1.549,4<br>61 | 832<br>1,834 | 2.486<br>5,480 |
| 56" | 1.708,2<br>67,25 | | 154<br>6,06 | 154<br>6,06 | 260,4<br>10,25 | 1.422,4<br>56 | 1.463,7<br>57,62 | 1.517,7<br>59,75 | 28 | 60,3<br>2,38 | 1.600,2<br>63 | 882<br>1,944 | 2.674<br>5,895 |
| 58" | 1.759<br>69,25 | | 158,7<br>6,25 | 158,7<br>6,25 | 266,7<br>10,50 | 1.473,2<br>58 | 1.514,5<br>59,62 | 1.574,8<br>62 | 32 | 60,3<br>2,38 | 1.651<br>65 | 928<br>2,046 | 2.913<br>6,422 |
| 60" | 1.809,8<br>71,25 | | 163,5<br>6,44 | 163,5<br>6,44 | 273,1<br>10,75 | 1.524<br>60 | 1.565,3<br>61,62 | 1.625,6<br>64 | 32 | 60,3<br>2,38 | 1.701,8<br>67 | 989<br>2,180 | 3.184<br>7,019 |

NEUMIRA

## BRIDAS WELDING NECK Y BLIND
## WELDING NECK AND BLIND FLANGES
## 400 Lbs.

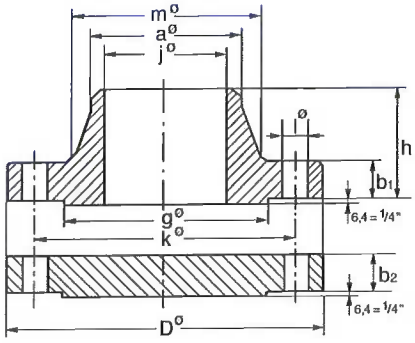


ASME B16.47 - 1996. Serie A

| Diámetro nominal del tubo Nominal Pipe size | Brida Flange | | | | | Cuello Hub | | Resalte Raised face | Taladros Drilling template | | | Peso aprox. Approx. weight kg. Pounds | |
|---|---|---|---|---|---|---|---|---|---|---|---|---|---|
| | D mm inches | J mm inches | Welding neck $b_1$ mm inches | Blind $b_2$ mm inches | h mm inches | a mm inches | m mm inches | g mm inches | Número Number | l mm inches | k mm inches | Welding Neck | Blind |
| 26" | 971,5<br>38,25 | Debe ser especificado por el comprador<br>To be specified by purchaser | 88,9<br>3,50 | 98,4<br>3,88 | 193,6<br>7,62 | 660,4<br>26 | 727,1<br>28,62 | 749,3<br>29,50 | 28 | 47,6<br>1,88 | 876,3<br>34,50 | 304<br>670 | 534<br>1,177 |
| 28" | 1.035,1<br>40,75 | | 95,3<br>3,75 | 104,8<br>4,12 | 206,4<br>8,12 | 711,2<br>28 | 782,6<br>30,81 | 800,1<br>31,50 | 28 | 50,8<br>2 | 939,8<br>37 | 362<br>798 | 645<br>1,423 |
| 30" | 1.092,2<br>43 | | 101,6<br>4 | 111,1<br>4,38 | 219,1<br>8,62 | 762<br>30 | 836,6<br>32,94 | 857,3<br>33,75 | 28 | 54<br>2,12 | 997<br>39,25 | 415<br>915 | 760<br>1,675 |
| 32" | 1.149,4<br>45,25 | | 108<br>4,25 | 115,9<br>4,56 | 231,8<br>9,12 | 812,8<br>32 | 889<br>35 | 914,4<br>36 | 28 | 54<br>2,12 | 1.054,1<br>41,50 | 478<br>1,054 | 885<br>1,951 |
| 34" | 1.206,5<br>47,50 | | 111,1<br>4,38 | 122,2<br>4,81 | 241,3<br>9,50 | 863,6<br>34 | 944,5<br>37,19 | 965,2<br>38 | 28 | 54<br>2,12 | 1.104,9<br>43,50 | 538<br>1,186 | 1.035<br>2,282 |
| 36" | 1.270<br>50 | | 114,3<br>4,50 | 128,6<br>5,06 | 250,8<br>9,88 | 914,4<br>36 | 1.000,1<br>39,38 | 1.022,3<br>40,25 | 32 | 54<br>2,12 | 1.168,4<br>46 | 604<br>1,331 | 1.205<br>2,656 |
| 38" | 1.206,5<br>47,50 | | 123,8<br>4,88 | 123,8<br>4,88 | 206,4<br>8,12 | 965,2<br>38 | 1.003,3<br>39,50 | 1.035,1<br>40,75 | 32 | 47,6<br>1,88 | 1.117,6<br>44 | 406<br>895 | 1.055<br>2,326 |
| 40" | 1.270<br>50 | | 130,2<br>5,12 | 130,2<br>5,12 | 215,9<br>8,50 | 1.016<br>40 | 1.054,3<br>41,50 | 1.092,2<br>43 | 32 | 50,8<br>2 | 1.174,8<br>46,25 | 473<br>1,043 | 1.229<br>2,709 |
| 42" | 1.320,8<br>52 | | 133,3<br>5,25 | 133,3<br>5,25 | 223,8<br>8,81 | 1.066,8<br>42 | 1.108,1<br>43,62 | 1.143<br>45 | 32 | 50,8<br>2 | 1.226,3<br>48,25 | 513<br>1,131 | 1.366<br>3,011 |
| 44" | 1.384,3<br>54,50 | | 139,7<br>5,50 | 139,7<br>5,50 | 233,3<br>9,18 | 1.117,6<br>44 | 1.158,9<br>45,62 | 1.200,1<br>47,25 | 32 | 54<br>2,12 | 1.282,7<br>50,50 | 586<br>1,292 | 1.569<br>3,459 |
| 46" | 1.441,5<br>56,75 | | 146,1<br>5,75 | 146,1<br>5,75 | 244,5<br>9,62 | 1.168,4<br>46 | 1.212,9<br>47,75 | 1.257,3<br>49,50 | 36 | 54<br>2,12 | 1.339,9<br>52,75 | 648<br>1,429 | 1.776<br>3,915 |
| 48" | 1.511,3<br>59,50 | | 152,4<br>6 | 152,4<br>6 | 257,2<br>10,12 | 1.219,2<br>48 | 1.266,8<br>49,88 | 1.308,1<br>51,50 | 28 | 60,3<br>2,38 | 1.403,4<br>55,25 | 768<br>1,693 | 2.043<br>4,504 |
| 50" | 1.568,5<br>61,75 | | 157,2<br>6,19 | 158,8<br>6,25 | 268,3<br>10,56 | 1.270<br>50 | 1.320,8<br>52 | 1.362,1<br>53,62 | 32 | 60,3<br>2,38 | 1.460,5<br>57,50 | 832<br>1,834 | 2.294<br>5,057 |
| 52" | 1.619,3<br>63,75 | | 161,9<br>6,38 | 163,5<br>6,44 | 276,2<br>10,88 | 1.320,8<br>52 | 1.371,6<br>54 | 1.412,9<br>55,62 | 32 | 60,3<br>2,38 | 1.511,3<br>59,50 | 897<br>1,977 | 2.500<br>5,511 |
| 54" | 1.701,8<br>67 | | 169,8<br>6,69 | 171,5<br>6,75 | 288,9<br>11,38 | 1.371,6<br>54 | 1.425,6<br>56,12 | 1.470<br>57,88 | 28 | 66,7<br>2,62 | 1.581,2<br>62,25 | 1.086<br>2,394 | 2.900<br>6,393 |
| 56" | 1.752,6<br>69 | | 174,6<br>6,88 | 176,2<br>6,94 | 298,5<br>11,75 | 1.422,4<br>56 | 1.479,5<br>58,25 | 1.527,2<br>60,12 | 32 | 66,7<br>2,62 | 1.632<br>64,25 | 1.139<br>2,511 | 3.174<br>6,997 |
| 58" | 1.803,4<br>71 | | 177,8<br>7 | 181<br>7,12 | 306,4<br>12,06 | 1.473,2<br>58 | 1.530,4<br>60,25 | 1.578<br>62,12 | 32 | 66,7<br>2,62 | 1.682,8<br>66,25 | 1.208<br>2,663 | 3.462<br>7,632 |
| 60" | 1.886<br>74,25 | | 185,7<br>7,31 | 188,9<br>7,44 | 319,5<br>12,56 | 1.524<br>60 | 1.584,3<br>62,38 | 1.635,1<br>64,38 | 32 | 73<br>2,88 | 1.752,6<br>69 | 1.408<br>3,105 | 3.940<br>8,687 |

NEUMIRA

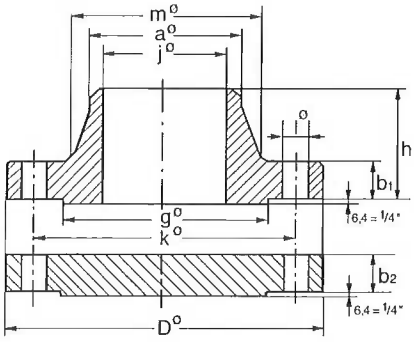


# BRIDAS WELDING NECK Y BLIND
# WELDING NECK AND BLIND FLANGES
# 600 Lbs.

**ASME B16.47 - 1996. Serie A**

| Diámetro nominal del tubo Nominal Pipe size | Brida Flange | | | | | Cuello Hub | | Resalte Raised face | Taladros Drilling template | | | Peso aprox. Approx. weight kg. Pounds | |
|---|---|---|---|---|---|---|---|---|---|---|---|---|---|
| | D mm inches | J mm inches | Welding neck $b_1$ mm inches | Blind $b_2$ mm inches | h mm inches | a mm inches | m mm inches | g mm inches | Número Number | l mm inches | k mm inches | Welding Neck | Blind |
| 26" | 1.016<br>40 | Debe ser especificado por el comprador<br>To be specified by purchaser | 108<br>4,25 | 125,4<br>4,94 | 222,3<br>8,75 | 660,4<br>26 | 747,7<br>29,44 | 749,3<br>29,50 | 28 | 50,8<br>2 | 914,4<br>36 | 427<br>941 | 740<br>1,631 |
| 28" | 1.073,2<br>42,25 | | 111,1<br>4,38 | 131,7<br>5,19 | 235<br>9,25 | 711,2<br>28 | 803,3<br>31,62 | 800,1<br>31,50 | 28 | 54<br>2,12 | 965,2<br>38 | 479<br>1,056 | 869<br>1,916 |
| 30" | 1.130,3<br>44,50 | | 114,3<br>4,50 | 139,7<br>5,50 | 247,7<br>9,75 | 762<br>30 | 862<br>33,94 | 857,3<br>33,75 | 28 | 54<br>2,12 | 1.022,4<br>40,25 | 545<br>1,201 | 1.030<br>2,271 |
| 32" | 1.193,8<br>47 | | 117,5<br>4,62 | 147,6<br>5,81 | 260,3<br>10,25 | 812,8<br>32 | 917,6<br>36,12 | 914,4<br>36 | 28 | 60,3<br>2,38 | 1.079,5<br>42,50 | 610<br>1,345 | 1.204<br>2,654 |
| 34" | 1.244,6<br>49 | | 120,6<br>4,75 | 154<br>6,06 | 269,8<br>10,62 | 863,6<br>34 | 970<br>38,31 | 965,2<br>38 | 28 | 60,3<br>2,38 | 1.130,3<br>44,50 | 666<br>1,468 | 1.371<br>3,023 |
| 36" | 1.314,5<br>51,75 | | 123,8<br>4,88 | 161,9<br>6,38 | 282,6<br>11,12 | 914,4<br>36 | 1.031,9<br>40,62 | 1.022,3<br>40,25 | 28 | 66,7<br>2,62 | 1.193,8<br>47 | 755<br>1,664 | 1.600<br>3,527 |
| 38" | 1.270<br>50 | | 152,4<br>6 | 155,6<br>6,12 | 254<br>10 | 965,2<br>38 | 1.022,4<br>40,25 | 1.054,1<br>41,50 | 28 | 60,3<br>2,38 | 1.162,1<br>45,75 | 640<br>1,411 | 1.447<br>3,190 |
| 40" | 1.320,8<br>52 | | 158,8<br>6,25 | 161,9<br>6,38 | 263,5<br>10,38 | 1.016<br>40 | 1.073,2<br>42,25 | 1.111,3<br>43,75 | 32 | 60,3<br>2,38 | 1.212,9<br>47,75 | 683<br>1,506 | 1.620<br>3,571 |
| 42" | 1.403<br>55,25 | | 168,3<br>6,62 | 171,5<br>6,75 | 279,4<br>11 | 1.066,8<br>42 | 1.127,8<br>44,38 | 1.168,3<br>46 | 28 | 66,7<br>2,62 | 1.282,7<br>50,50 | 754<br>1,662 | 1.948<br>4,294 |
| 44" | 1.454,2<br>57,25 | | 173,3<br>6,81 | 177,8<br>7 | 288,9<br>11,38 | 1.117,6<br>44 | 1.181,1<br>46,50 | 1.225,5<br>48,25 | 32 | 66,7<br>2,62 | 1.333,5<br>52,50 | 903<br>1,990 | 2.100<br>4,630 |
| 46" | 1.511,3<br>59,50 | | 179,4<br>7,06 | 185,7<br>7,31 | 300<br>11,81 | 1.168,4<br>46 | 1.235,1<br>48,62 | 1.276,4<br>50,25 | 32 | 66,7<br>2,62 | 1.390,7<br>54,75 | 1.054<br>2,323 | 2.450<br>5,401 |
| 48" | 1.593,9<br>62,75 | | 188,9<br>7,44 | 195,3<br>7,69 | 315,9<br>12,44 | 1.219,2<br>48 | 1.289,1<br>50,75 | 1.333,5<br>52,50 | 32 | 73<br>2,88 | 1.460,5<br>57,50 | 1.200<br>2,645 | 2.850<br>6,283 |
| 50" | 1.670,1<br>65,75 | | 196,9<br>7,75 | 203,2<br>8 | 328,6<br>12,94 | 1.270<br>50 | 1.343<br>52,88 | 1.384,3<br>54,50 | 28 | 79,4<br>3,12 | 1.524<br>60 | 1.363<br>3,005 | 3.233<br>7,127 |
| 52" | 1.720,9<br>67,75 | | 203,2<br>8 | 209,55<br>8,25 | 336,5<br>13,25 | 1.320,8<br>52 | 1.393,8<br>54,88 | 1.435,1<br>56,50 | 32 | 79,4<br>3,12 | 1.574,8<br>62 | 1.466<br>3,232 | 3.570<br>7,870 |
| 54" | 1.778<br>70 | | 209,5<br>8,25 | 217,5<br>8,56 | 349,2<br>13,75 | 1.371,6<br>54 | 1.447,8<br>57 | 1.492,3<br>58,75 | 32 | 79,4<br>3,12 | 1.632<br>64,25 | 1.605<br>3,538 | 3.968<br>8,747 |
| 56" | 1.854,2<br>73 | | 217,5<br>8,56 | 225,4<br>8,88 | 362<br>14,25 | 1.422,4<br>56 | 1.501,8<br>59,12 | 1.543,1<br>60,75 | 32 | 85,7<br>3,38 | 1.695,5<br>66,75 | 1.709<br>3,767 | 4.450<br>9,810 |
| 58" | 1.905<br>75 | | 222,3<br>8,75 | 231,8<br>9,12 | 369,9<br>14,56 | 1.473,2<br>58 | 1.552,6<br>61,12 | 1.600,2<br>63 | 32 | 85,7<br>3,38 | 1.746,3<br>68,75 | 1.916<br>4,224 | 4.850<br>10,692 |
| 60" | 1.993,9<br>78,50 | | 233,3<br>9,19 | 242,9<br>9,56 | 389<br>15,31 | 1.524<br>60 | 1.609,7<br>63,38 | 1.657,3<br>65,25 | 28 | 92,1<br>3,62 | 1.822,5<br>71,75 | 2.300<br>5,070 | 5.588<br>12,319 |

NEUMIRA

## BRIDAS WELDING NECK Y BLIND
## WELDING NECK AND BLIND FLANGES
## 900 Lbs.

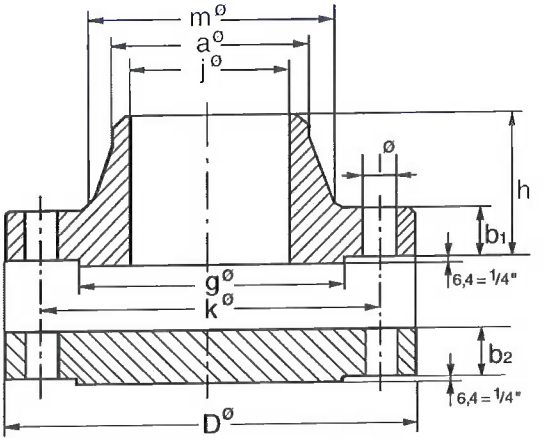


**ASME B16.47 - 1996. Serie A**

| Diámetro nominal del tubo Nominal Pipe size | Brida Flange | | | | | Cuello Hub | | Resalte Raised face | Taladros Drilling template | | | Peso aprox. Approx. weight kg. Pounds | |
|---|---|---|---|---|---|---|---|---|---|---|---|---|---|
| | D mm inches | J mm inches | Welding neck $b_1$ mm inches | Blind $b_2$ mm inches | h mm inches | a mm inches | m mm inches | g mm inches | Número Number | l mm inches | k mm inches | Welding Neck | Blind |
| 26" | 1.085,9<br>42,75 | Debe ser especificado por el comprador<br>To be specified by purchaser | 139,7<br>5,50 | 160,3<br>6,31 | 285,8<br>11,25 | 660,4<br>26 | 774,7<br>30,50 | 749,3<br>29,50 | 20 | 73<br>2,88 | 952,5<br>37,50 | 665<br>1,466 | 1.060<br>2,337 |
| 28" | 1.168,4<br>46 | | 142,8<br>5,62 | 171,5<br>6,75 | 298,5<br>11,75 | 711,2<br>28 | 831,8<br>32,75 | 800,1<br>31,50 | 20 | 79,4<br>3,12 | 1.022,4<br>40,25 | 783<br>1,726 | 1.306<br>2,879 |
| 30" | 1.231,9<br>48,50 | | 149,2<br>5,88 | 182,5<br>7,18 | 311,2<br>12,25 | 762<br>30 | 889<br>35 | 857,3<br>33,75 | 20 | 79,4<br>3,12 | 1.085,9<br>42,75 | 903<br>1,990 | 1.565<br>3,450 |
| 32" | 1.314,5<br>51,75 | | 158,8<br>6,25 | 193,7<br>7,62 | 330,2<br>13 | 812,8<br>32 | 946,2<br>37,25 | 914,4<br>36 | 20 | 85,7<br>3,38 | 1.155,7<br>45,50 | 1.056<br>2,328 | 1.885<br>4,156 |
| 34" | 1.397<br>55 | | 165,1<br>6,50 | 204,8<br>8,06 | 349,3<br>13,75 | 863,6<br>34 | 1.006,5<br>39,62 | 965,2<br>38 | 20 | 92,1<br>3,62 | 1.225,5<br>48,25 | 1.276<br>2,813 | 2.250<br>4,960 |
| 36" | 1.460,5<br>57,50 | | 171,5<br>6,75 | 214,3<br>8,44 | 362<br>14,25 | 914,4<br>36 | 1.063,6<br>41,88 | 1.022,4<br>40,25 | 20 | 92,1<br>3,62 | 1.289,1<br>50,75 | 1.439<br>3,172 | 2.595<br>5,721 |
| 38" | 1.460,5<br>57,50 | | 190,5<br>7,50 | 215,9<br>8,50 | 352,4<br>13,88 | 965,2<br>38 | 1.073,2<br>42,25 | 1.098,5<br>43,25 | 20 | 92,1<br>3,62 | 1.289,1<br>50,75 | 1.400<br>3,086 | 2.610<br>5,754 |
| 40" | 1.511,3<br>59,50 | | 196,8<br>7,75 | 223,8<br>8,81 | 363,5<br>14,31 | 1.016<br>40 | 1.127,1<br>44,38 | 1.162,1<br>45,75 | 24 | 92,1<br>3,62 | 1.339,9<br>52,75 | 1.481<br>3,265 | 2.870<br>6,327 |
| 42" | 1.562,1<br>61,50 | | 206,4<br>8,12 | 231,8<br>9,12 | 371,5<br>14,62 | 1.066,8<br>42 | 1.176,3<br>46,31 | 1.212,9<br>47,75 | 24 | 92,1<br>3,62 | 1.390,7<br>54,75 | 1.620<br>3,571 | 3.195<br>7,044 |
| 44" | 1.647,8<br>64,88 | | 214,3<br>8,44 | 242,9<br>9,56 | 390,5<br>15,38 | 1.117,6<br>44 | 1.235,1<br>48,62 | 1.270<br>50 | 24 | 98,4<br>3,88 | 1.463,7<br>57,62 | 1.780<br>3,924 | 3.720<br>8,201 |
| 46" | 1.733,5<br>68,25 | | 225,4<br>8,88 | 255,6<br>10,06 | 411,2<br>16,18 | 1.168,4<br>46 | 1.292,2<br>50,88 | 1.333,5<br>52,50 | 24 | 104,8<br>4,12 | 1.536,7<br>60,50 | 2.200<br>4,850 | 4.579<br>10,095 |
| 48" | 1.784,4<br>70,25 | | 233,4<br>9,19 | 263,5<br>10,38 | 419,1<br>16,50 | 1.219,2<br>48 | 1.343<br>52,88 | 1.384,3<br>54,50 | 24 | 104,8<br>4,12 | 1.587,5<br>62,50 | 2.364<br>5,212 | 4.730<br>10,428 |

NEUMIRA

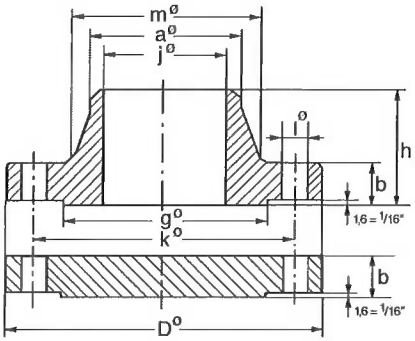


## BRIDAS WELDING NECK Y BLIND
## WELDING NECK AND BLIND FLANGES
## 75 Lbs.

ASME B16.47 - 1996. Serie B

| Tubo Pipe | | Brida Flange | | | | | Cuello Hub | | Resalte Raised face | Taladros Drilling template | | | Peso aprox. Approx. weight kg. Pounds | |
|---|---|---|---|---|---|---|---|---|---|---|---|---|---|---|
| Diámetro nominal del tubo Nominal Pipe size | OD mm inches | D mm inches | J mm inches | b Blind mm inches | b Welding Neck mm inches | h mm inches | a mm inches | m mm inches | g mm inches | Número Number | l mm inches | k mm inches | Welding Neck | Blind |
| 26" | 660,4<br>26,0 | 762,0<br>30 | Debe ser especificado por el comprador<br>To be specified by purchaser | 33,4<br>1,31 | 33,4<br>1,31 | 58,8<br>2,31 | 662<br>26,06 | 676,3<br>26,62 | 704,9<br>27,75 | 36 | 19,1<br>0,75 | 723,9<br>28,50 | 40<br>88 | 116,86<br>258 |
| 28" | 711,2<br>28,0 | 812,8<br>32 | | 33,4<br>1,31 | 33,4<br>1,31 | 61,9<br>2,44 | 712,8<br>28,06 | 727,1<br>28,62 | 755,7<br>29,75 | 40 | 19,1<br>0,75 | 774,7<br>30,50 | 44<br>97 | 133,04<br>293 |
| 30" | 762<br>30,0 | 863,6<br>34 | | 33,4<br>1,31 | 33,4<br>1,31 | 65,1<br>2,56 | 763,6<br>30,06 | 777,9<br>30,62 | 806,5<br>31,75 | 44 | 19,1<br>0,75 | 825,5<br>32,50 | 48<br>106 | 150,27<br>331 |
| 32" | 812,8<br>32,0 | 914,4<br>36 | | 36,6<br>1,44 | 34,9<br>1,38 | 69,9<br>2,75 | 814,4<br>32,06 | 828,7<br>32,62 | 857,3<br>33,75 | 48 | 19,1<br>0,75 | 876,3<br>34,50 | 54<br>119 | 184,72<br>407 |
| 34" | 863,6<br>34,0 | 965,2<br>38 | | 38,1<br>1,50 | 34,9<br>1,38 | 73<br>2,88 | 865,2<br>34,06 | 879,5<br>34,62 | 908,1<br>35,75 | 52 | 19,1<br>0,75 | 927,1<br>36,50 | 59<br>130 | 214,38<br>473 |
| 36" | 914,4<br>36,0 | 1.033,5<br>40,69 | | 42,4<br>1,67 | 36,5<br>1,44 | 85,7<br>3,38 | 916<br>36,06 | 935,03<br>36,81 | 965,2<br>38 | 40 | 22,2<br>0,88 | 992,2<br>39,06 | 78<br>172 | 274,07<br>604 |
| 38" | 965,2<br>38,0 | 1.084,0<br>42,69 | | 44,4<br>1,75 | 38,1<br>1,50 | 88,9<br>3,50 | 966,8<br>38,06 | 985,8<br>38,81 | 1.016<br>40 | 40 | 22,2<br>0,88 | 1.043<br>41,06 | 85<br>187 | 316,27<br>647 |
| 40" | 1.016<br>40,0 | 1.135,0<br>44,69 | | 44,4<br>1,75 | 38,1<br>1,50 | 92,1<br>3,62 | 1.017,6<br>40,06 | 1.036,6<br>40,81 | 1.066,8<br>42 | 44 | 22,2<br>0,88 | 1.093,8<br>43,06 | 93<br>205 | 346,71<br>764 |
| 42" | 1.066,8<br>42,0 | 1.185,9<br>46,69 | | 47,7<br>1,88 | 39,7<br>1,56 | 95,3<br>3,75 | 1.068,4<br>42,06 | 1.087,5<br>42,81 | 1.117,6<br>44 | 48 | 22,2<br>0,88 | 1.144,6<br>45,06 | 100<br>220 | 400,64<br>896 |
| 44" | 1.117,6<br>44,0 | 1.251,0<br>49,25 | | 49,3<br>1,94 | 42,9<br>1,69 | 104,8<br>4,12 | 1.119,2<br>44,06 | 1.139,8<br>44,88 | 1.174,8<br>46,25 | 36 | 25,4<br>1 | 1.203,3<br>47,38 | 113<br>249 | 468,63<br>1.033 |
| 46" | 1.168,4<br>46,0 | 1.302,0<br>51,25 | | 50,8<br>2 | 44,4<br>1,75 | 108<br>4,25 | 1.170<br>46,06 | 1.190,6<br>46,88 | 1.225,6<br>48,25 | 40 | 25,4<br>1 | 1.254,1<br>49,38 | 127<br>280 | 522,86<br>1.153 |
| 48" | 1.219,2<br>48,0 | 1.352,6<br>53,25 | | 53,8<br>2,12 | 46,03<br>1,81 | 111,1<br>4,38 | 1.220,8<br>48,06 | 1.241,5<br>48,88 | 1.276,4<br>50,25 | 44 | 25,4<br>1 | 1.304,9<br>51,38 | 141<br>131 | 597,43<br>1.317 |
| 50" | 1.270<br>50 | 1.403,0<br>55,25 | | 55,4<br>2,18 | 47,6<br>1,88 | 115,9<br>4,56 | 1.271,6<br>50,06 | 1.293,8<br>50,94 | 1.327,2<br>52,25 | 44 | 25,4<br>1 | 1.355,7<br>53,38 | 153<br>337 | 662,64<br>1.461 |
| 52" | 1.320,8<br>52,0 | 1.457,0<br>57,38 | | 57,1<br>2,25 | 47,6<br>1,88 | 120,7<br>4,75 | 1.322,4<br>52,06 | 1.344,6<br>52,94 | 1.378<br>54,25 | 48 | 25,4<br>1 | 1.409,7<br>55,50 | 160<br>352 | 736,43<br>1.624 |
| 54" | 1.371,6<br>54,0 | 1.508,1<br>59,38 | | 60,4<br>2,38 | 49,2<br>1,94 | 125,4<br>4,94 | 1.373,2<br>54,06 | 1.397<br>55 | 1.428,8<br>56,25 | 48 | 25,4<br>1 | 1.460,5<br>57,50 | 177<br>390 | 835,42<br>1.842 |
| 56" | 1.422,4<br>56,0 | 1.575,0<br>62 | | 61,9<br>2,44 | 50,8<br>2 | 134,9<br>5,31 | 1.424<br>56,06 | 1.451<br>57,12 | 1.485,9<br>58,50 | 40 | 28,6<br>1,12 | 1.520,8<br>59,88 | 198<br>436 | 934,21<br>2.060 |
| 58" | 1.473,2<br>58,0 | 1.626,0<br>64 | | 63,5<br>2,50 | 52,4<br>2,06 | 138,1<br>5,44 | 1.474,8<br>58,06 | 1.501,8<br>59,12 | 1.622,4<br>60,50 | 44 | 28,6<br>1,12 | 1.571,6<br>61,88 | 218<br>480 | 1.020,99<br>2.251 |
| 60" | 1.524<br>60,0 | 1.676,4<br>66 | | 66,5<br>2,62 | 55,6<br>2,19 | 144,5<br>5,69 | 1.524,6<br>60,06 | 1.552,6<br>61,12 | 1.587,6<br>62,50 | 44 | 28,6<br>1,12 | 1.622,4<br>63,88 | 245<br>540 | 1.137,47<br>2.508 |

NEUMIRA

## BRIDAS WELDING NECK Y BLIND
## WELDING NECK AND BLIND FLANGES
## 150 Lbs.

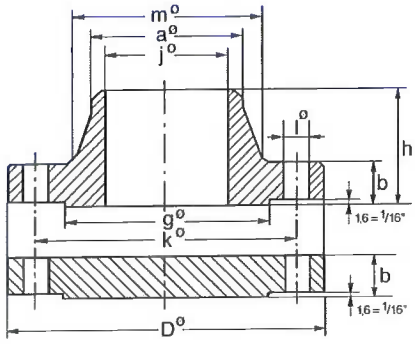


ASME B16.47 - 1996. Serie B

| Tubo Pipe | | Brida Flange | | | | | Cuello Hub | | Resalte Raised face | Taladros Drilling template | | | Peso aprox. Approx. weight kg. Pounds | |
|---|---|---|---|---|---|---|---|---|---|---|---|---|---|---|
| Diámetro nominal del tubo Nominal Pipe size | OD mm inches | D mm inches | J mm inches | b Blind mm inches | b Welding Neck mm inches | h mm inches | a mm inches | m mm inches | g mm inches | Número Number | l mm inches | k mm inches | Welding Neck | Blind |
| 26" | 660,4<br>26,0 | 785,8<br>30,94 | Debe ser especificado por el comprador<br>To be specified by purchaser | 44,4<br>1,75 | 41,3<br>1,62 | 88,9<br>3,50 | 662,0<br>26,06 | 684,2<br>26,94 | 711,2<br>28 | 36 | 22,2<br>0,88 | 744,5<br>29,31 | 63<br>139 | 164,17<br>362 |
| 28" | 711,2<br>28,0 | 836,6<br>32,94 | | 47,8<br>1,88 | 44,4<br>1,75 | 95,2<br>3,75 | 712,8<br>28,06 | 735,0<br>28,94 | 762,0<br>30 | 40 | 22,2<br>0,88 | 795,3<br>31,31 | 74<br>163 | 200,45<br>442 |
| 30" | 762<br>30,0 | 887,4<br>34,94 | | 50,8<br>2 | 44,4<br>1,75 | 100,0<br>3,94 | 763,6<br>30,06 | 787,4<br>31 | 812,8<br>32 | 44 | 22,2<br>0,88 | 846,1<br>33,31 | 80<br>176 | 239,85<br>529 |
| 32" | 812,8<br>32,0 | 941,4<br>37,06 | | 53,8<br>2,12 | 46<br>1,81 | 107,9<br>4,25 | 814,4<br>32,06 | 839,8<br>33,06 | 863,6<br>34 | 48 | 22,2<br>0,88 | 900,1<br>35,44 | 92<br>203 | 286,11<br>631 |
| 34" | 863,6<br>34,0 | 1.004,9<br>39,56 | | 57,1<br>2,25 | 49,2<br>1,94 | 110,3<br>4,34 | 865,2<br>34,06 | 892,2<br>35,12 | 920,7<br>36,25 | 40 | 25,4<br>1 | 957,3<br>37,69 | 113<br>249 | 346,42<br>764 |
| 36" | 914,4<br>36,0 | 1.057,3<br>41,62 | | 58,7<br>2,31 | 52,4<br>2,06 | 117,5<br>4,62 | 916,0<br>36,06 | 944,6<br>37,19 | 971,5<br>38,25 | 44 | 25,4<br>1 | 1.009,6<br>39,75 | 129<br>284 | 394,30<br>869 |
| 38" | 965,2<br>38,0 | 1.124,0<br>44,25 | | 63,5<br>2,50 | 54,0<br>2,12 | 123,8<br>4,88 | 968,4<br>38,12 | 997,0<br>39,25 | 1.022,4<br>40,25 | 40 | 28,6<br>1,12 | 1.070,0<br>42,12 | 150<br>330 | 481,80<br>1.062 |
| 40" | 1.016<br>40,0 | 1.175,0<br>46,25 | | 66,5<br>2,62 | 55,6<br>2,19 | 128,6<br>5,06 | 1.019,2<br>40,12 | 1.049,3<br>41,31 | 1.079,5<br>42,50 | 44 | 28,6<br>1,12 | 1.120,8<br>44,12 | 162<br>356 | 551,30<br>1.215 |
| 42" | 1.066,8<br>42,0 | 1.225,5<br>48,25 | | 68,3<br>2,69 | 58,7<br>2,31 | 133,3<br>5,25 | 1.070,0<br>42,12 | 1.101,7<br>43,38 | 1.130,3<br>44,50 | 48 | 28,6<br>1,12 | 1.171,6<br>46,12 | 184<br>406 | 615,89<br>1.358 |
| 44" | 1.117,6<br>44,0 | 1.276,0<br>50,25 | | 71,4<br>2,81 | 60,3<br>2,38 | 136,5<br>5,38 | 1.120,8<br>44,12 | 1.152,5<br>45,38 | 1.181,1<br>46,50 | 52 | 28,6<br>1,12 | 1.222,4<br>48,12 | 192<br>422 | 698,01<br>1.539 |
| 46" | 1.168,4<br>46,0 | 1.341,0<br>52,81 | | 74,7<br>2,94 | 61,9<br>2,44 | 144,5<br>5,69 | 1.171,6<br>46,12 | 1.204,9<br>47,44 | 1.235,1<br>48,62 | 40 | 31,7<br>1,25 | 1.284,3<br>50,56 | 224<br>493 | 809,69<br>1.785 |
| 48" | 1.219,2<br>48,0 | 1.392,2<br>54,81 | | 77,7<br>3,06 | 65,1<br>2,56 | 149,2<br>5,88 | 1.222,4<br>48,12 | 1.257,3<br>49,50 | 1.289,0<br>50,75 | 44 | 31,7<br>1,25 | 1.335,1<br>52,56 | 231<br>509 | 907,32<br>2.000 |
| 50" | 1.270<br>50,0 | 1.443,0<br>56,81 | | 80,8<br>3,18 | 68,3<br>2,69 | 154<br>6,06 | 1.273,2<br>50,12 | 1.308,1<br>51,50 | 1.339,8<br>52,75 | 48 | 31,7<br>1,25 | 1.385,9<br>54,56 | 263<br>579 | 1.013,27<br>2.234 |
| 52" | 1.320,8<br>52,0 | 1.494,0<br>58,81 | | 84,1<br>3,31 | 69,8<br>2,75 | 157,2<br>6,19 | 1.324,0<br>52,12 | 1.369,5<br>53,56 | 1.390,6<br>54,75 | 52 | 31,7<br>1,25 | 1.436,7<br>56,56 | 285<br>627 | 1.130,23<br>2.492 |
| 54" | 1.371,6<br>54,0 | 1.549,4<br>61 | | 87,4<br>3,44 | 71,4<br>2,81 | 161,9<br>6,38 | 1.374,8<br>54,12 | 1.412,9<br>55,62 | 1.441,4<br>56,75 | 56 | 31,7<br>1,25 | 1.492,2<br>58,75 | 287<br>632 | 1.263,27<br>2.785 |
| 56" | 1.422,4<br>56,0 | 1.600,0<br>63 | | 90,4<br>3,56 | 73,0<br>2,88 | 166,7<br>6,56 | 1.425,6<br>56,12 | 1.465,3<br>57,69 | 1.492,3<br>58,75 | 60 | 31,7<br>1,25 | 1.543,0<br>60,75 | 323<br>711 | 1.393,21<br>3.071 |
| 58" | 1.473,2<br>58,0 | 1.675,0<br>65,94 | | 93,5<br>3,68 | 74,6<br>2,94 | 174,6<br>6,88 | 1.476,4<br>58,12 | 1.516,1<br>56,69 | 1.543,0<br>60,75 | 48 | 34,9<br>1,38 | 1.611,3<br>63,44 | 384<br>845 | 1.583,64<br>3.491 |
| 60" | 1.524<br>60,0 | 1.725,6<br>67,94 | | 96,8<br>3,81 | 76,2<br>3 | 179,4<br>7,06 | 1.527,2<br>60,12 | 1.570,0<br>61,81 | 1.600,2<br>63 | 52 | 34,9<br>1,38 | 1.662,1<br>65,44 | 388<br>855 | 1.739,31<br>3.834 |

NEUMIRA

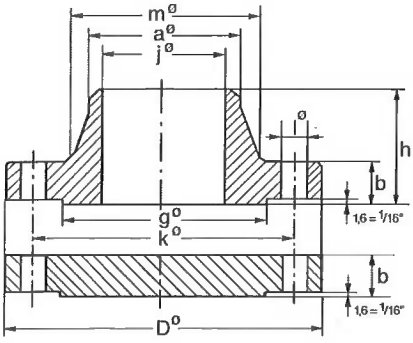


# BRIDAS WELDING NECK Y BLIND
# WELDING NECK AND BLIND FLANGES
# 300 Lbs.

**ASME B16.47 - 1996. Serie B**

| Tubo Pipe | | Brida Flange | | | | | Cuello Hub | | Resalte Raised face | Taladros Drilling template | | | Peso aprox. Approx. weight kg. Pounds | |
|---|---|---|---|---|---|---|---|---|---|---|---|---|---|---|
| Diámetro nominal del tubo Nominal Pipe size | OD mm inches | D mm inches | J mm inches | b Blind mm inches | b Welding Neck mm inches | h mm inches | a mm inches | m mm inches | g mm inches | Número Number | l mm inches | k mm inches | Welding Neck | Blind |
| 26" | 660,4<br>26,0 | 866,8<br>34,12 | Debe ser especificado por el comprador<br>To be specified by purchaser | 88,9<br>3,50 | 88,9<br>3,50 | 144,5<br>5,69 | 665,2<br>26,19 | 701,7<br>27,62 | 736,6<br>29 | 32 | 34,9<br>1,38 | 803,3<br>31,62 | 181<br>399 | 390,45<br>861 |
| 28" | 711,2<br>28,0 | 920,7<br>36,25 | | 88,9<br>3,50 | 88,9<br>3,50 | 149,2<br>5,88 | 716,0<br>28,19 | 755,6<br>29,75 | 787,4<br>31 | 36 | 34,9<br>1,38 | 857,2<br>33,75 | 203<br>447 | 440,59<br>971 |
| 30" | 762<br>30,0 | 990,6<br>39 | | 93,7<br>3,69 | 93,7<br>3,69 | 158,0<br>6,22 | 768,4<br>30,25 | 812,8<br>32 | 844,5<br>33,25 | 36 | 38,1<br>1,50 | 920,7<br>36,25 | 268<br>590 | 536,70<br>1.183 |
| 32" | 812,8<br>32,0 | 1.054,1<br>41,50 | | 103,2<br>4,06 | 103,2<br>4,06 | 168,3<br>6,62 | 819,2<br>32,25 | 863,6<br>34 | 901,7<br>35,50 | 32 | 41,3<br>1,62 | 977,9<br>38,50 | 330<br>727 | 672,24<br>1.482 |
| 34" | 863,6<br>34,0 | 1.108,1<br>43,62 | | 103,2<br>4,06 | 103,2<br>4,06 | 173,0<br>6,81 | 869,9<br>34,25 | 917,6<br>36,12 | 952,5<br>37,50 | 36 | 41,3<br>1,62 | 1.031,9<br>40,62 | 357<br>787 | 742,19<br>1.636 |
| 36" | 914,4<br>36,0 | 1.171,6<br>46,12 | | 103,2<br>4,06 | 103,2<br>4,06 | 181,0<br>7,12 | 920,7<br>36,25 | 965,2<br>38 | 1.009,6<br>39,75 | 32 | 44,4<br>1,75 | 1.089,0<br>42,88 | 405<br>893 | 833,23<br>1.837 |
| 38" | 965,2<br>38,0 | 1.222,0<br>48,12 | | 111,2<br>4,38 | 111,1<br>4,38 | 192,1<br>7,56 | 971,6<br>38,25 | 1.016,0<br>40 | 1.060,4<br>41,75 | 36 | 44,4<br>1,75 | 1.139,8<br>44,88 | 416<br>917 | 974,25<br>2.148 |
| 40" | 1.016<br>40,0 | 1.273,0<br>50,12 | | 115,9<br>4,56 | 115,9<br>4,56 | 198,4<br>7,81 | 1.022,4<br>40,25 | 1.066,8<br>42 | 1.114,4<br>43,88. | 40 | 44,4<br>1,75 | 1.190,6<br>46,88 | 450<br>992 | 1.101,63<br>2.429 |
| 42" | 1.066,8<br>42,0 | 1.333,5<br>52,50 | | 119,1<br>4,69 | 119,1<br>4,69 | 204,8<br>8,06 | 1.074,7<br>42,31 | 1.117,6<br>44 | 1.168,4<br>46 | 36 | 47,6<br>1,88 | 1.249,6<br>49 | 502<br>1.106 | 1.245,85<br>2.747 |
| 44" | 1.117,6<br>44,0 | 1.384,0<br>54,50 | | 127<br>5 | 127,0<br>5 | 214,3<br>8,44 | 1.125,5<br>44,31 | 1.173,2<br>46,19 | 1.219,2<br>48 | 40 | 47,6<br>1,88 | 1.295,4<br>51 | 552<br>1.216 | 1.428,84<br>3.150 |
| 46" | 1.168,4<br>46,0 | 1.460,0<br>57,50 | | 130<br>5,12 | 128,6<br>5,06 | 222,2<br>8,75 | 1.176,3<br>46,31 | 1.228,7<br>48,38 | 1.270,0<br>50 | 36 | 50,8<br>2 | 1.365,2<br>53,75 | 650<br>1.432 | 1.634,01<br>3.602 |
| 48" | 1.219,2<br>48,0 | 1.511,3<br>59,50 | | 134,9<br>5,31 | 128,6<br>5,06 | 223,8<br>8,81 | 1.227,1<br>48,31 | 1.277,9<br>50,31 | 1.327,1<br>52,25 | 40 | 50,8<br>2 | 1.416,0<br>55,75 | 731<br>1.611 | 1.813,79<br>3.999 |
| 50" | 1.270<br>50 | 1.562,0<br>61,50 | | 140<br>5,50 | 138,1<br>5,44 | 235,0<br>9,25 | 1.277,9<br>50,31 | 1.330,3<br>52,38 | 1.378,0<br>54,25 | 44 | 50,8<br>2 | 1.466,8<br>57,75 | 760<br>1.675 | 2.007,95<br>4.427 |
| 52" | 1.320,8<br>52,0 | 1.613,0<br>63,50 | | 144,3<br>5,68 | 142,9<br>5,62 | 242,9<br>9,56 | 1.328,7<br>52,31 | 1.382,7<br>54,44 | 1.428,8<br>56,25 | 48 | 50,8<br>2 | 1.517,6<br>59,75 | 800<br>1.763 | 2.204,50<br>4.860 |
| 54" | 1.371,6<br>54,0 | 1.673,2<br>65,88 | | 149,3<br>5,88 | 136,5<br>5,38 | 239,7<br>9,44 | 1.379,5<br>54,31 | 1.435,1<br>56,50 | 1.479,5<br>58,25 | 48 | 50,8<br>2 | 1.578,0<br>62,12 | 898<br>1.979 | 2.462,98<br>5.430 |
| 56" | 1.422,4<br>56,0 | 1.765,0<br>69,50 | | 157<br>6,18 | 154,0<br>6,06 | 268,3<br>10,56 | 1.430,3<br>56,31 | 1.493,8<br>58,81 | 1.536,7<br>60,50 | 36 | 60,3<br>2,38 | 1.651,0<br>65 | 1.143<br>2.519 | 2.888,72<br>6.368 |
| 58" | 1.473,2<br>58,0 | 1.827,0<br>71,94 | | 162<br>6,38 | 154,0<br>6,06 | 274,6<br>10,81 | 1.481,1<br>58,31 | 1.547,8<br>60,94 | 1.593,8<br>62,75 | 40 | 60,3<br>2,38 | 1.712,9<br>67,44 | 1.217<br>2.682 | 3.188,63<br>7.030 |
| 60" | 1.524,0<br>60,0 | 1.878,0<br>73,94 | | 167<br>6,56 | 150,8<br>5,94 | 271,5<br>10,69 | 1.531,9<br>60,31 | 1.598,6<br>62,94 | 1.651,0<br>65 | 40 | 60,3<br>2,38 | 1.763,7<br>69,44 | 1.311<br>2.890 | 3.481,59<br>7.675 |

NEUMIRA

## BRIDAS WELDING NECK Y BLIND
## WELDING NECK AND BLIND FLANGES
## 400 Lbs.

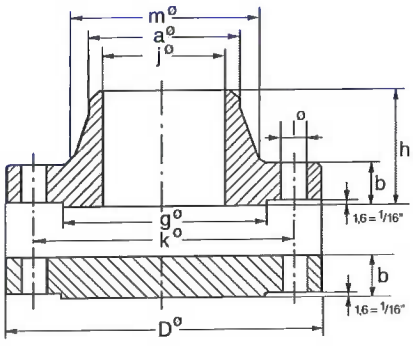


ASME B16.47 - 1996. Serie B

| Tubo Pipe | | Brida Flange | | | | | Cuello Hub | | Resalte Raised face | Taladros Drilling template | | | Peso aprox. Approx. weight kg. Pounds | |
|---|---|---|---|---|---|---|---|---|---|---|---|---|---|---|
| Diámetro nominal del tubo Nominal Pipe size | OD mm inches | D mm inches | J mm inches | b Blind mm inches | b Welding Neck mm inches | h mm inches | a mm inches | m mm inches | g mm inches | Número Number | l mm inches | k mm inches | Welding Neck | Blind |
| 26" | 660,4<br>26,0 | 851,0<br>33,50 | Debe ser especificado por el comprador<br>To be specified by purchaser | 88,9<br>3,50 | 88,9<br>3,50 | 149,2<br>5,88 | 660,4<br>26 | 689,0<br>27,12 | 711,2<br>28 | 28 | 38,1<br>1,50 | 781,0<br>30,75 | 176<br>388 | 374,66<br>826 |
| 28" | 711,2<br>28,0 | 914,0<br>36 | | 95,2<br>3,75 | 95,2<br>3,75 | 158,8<br>6,25 | 711,2<br>28 | 739,8<br>29,12 | 762,0<br>30 | 24 | 41,3<br>1,62 | 838,2<br>33 | 216<br>476 | 466,30<br>1.028 |
| 30" | 762<br>30,0 | 972,0<br>38,25 | | 101,6<br>4 | 101,6<br>4 | 169,9<br>6,69 | 762,0<br>30 | 793,8<br>31,25 | 819,2<br>32,25 | 28 | 41,3<br>1,62 | 895,4<br>35,25 | 253<br>557 | 561,90<br>1.239 |
| 32" | 812,8<br>32,0 | 1.035,0<br>40,75 | | 108<br>4,25 | 108,0<br>4,25 | 179,4<br>7,06 | 812,8<br>32 | 844,6<br>33,25 | 873,1<br>34,38 | 28 | 44,4<br>1,75 | 952,5<br>37,50 | 300<br>661 | 676,53<br>1.491 |
| 34" | 863,6<br>34,0 | 1.086,0<br>42,75 | | 111,2<br>4,38 | 111,1<br>4,38 | 187,3<br>7,38 | 863,6<br>34 | 898,5<br>35,38 | 927,1<br>36,50 | 32 | 44,4<br>1,75 | 1.003,3<br>39,50 | 327<br>720 | 764,64<br>1.686 |
| 36" | 914,4<br>36,0 | 1.156,0<br>45,50 | | 119,1<br>4,69 | 119,1<br>4,69 | 200,0<br>7,88 | 914,4<br>36 | 952,5<br>37,50 | 981,1<br>38,62 | 28 | 47,6<br>1,88 | 1.066,8<br>42 | 402<br>886 | 934,68<br>2.060 |
| 38" | 965,2<br>38,0 | 1.206,0<br>47,5 | | 123,8<br>4,88 | 123,8<br>4,88 | 206,4<br>8,12 | 965,2<br>38 | 1.003,3<br>39,50 | 1.035<br>40,75 | 32 | 47,6<br>1,88 | 1.117,6<br>44 | 433<br>954 | 1.055<br>2.326 |
| 40" | 1.016,0<br>40,0 | 1.270,0<br>50 | | 130,2<br>5,12 | 130,2<br>5,12 | 215,9<br>8,50 | 1.016,0<br>40 | 1.054,1<br>41,50 | 1.092,2<br>43 | 32 | 50,8<br>2 | 1.174,8<br>46,25 | 505<br>1.112 | 1.229<br>2.709 |
| 42" | 1.066,8<br>42,0 | 1.321,0<br>52 | | 133,4<br>5,25 | 133,4<br>5,25 | 223,8<br>8,81 | 1.066,8<br>42 | 1.108,1<br>43,62 | 1.143,0<br>45 | 32 | 50,8<br>2 | 1.225,6<br>48,25 | 542<br>1.194 | 1.366<br>3.011 |
| 44" | 1.117,6<br>44,0 | 1.384,0<br>54,50 | | 139,7<br>5,50 | 139,7<br>5,50 | 233,4<br>9,18 | 1.117,6<br>44 | 1.158,9<br>45,62 | 1.200,2<br>47,25 | 32 | 54<br>2,12 | 1.282,7<br>50,50 | 613<br>1.350 | 1.569<br>3.459 |
| 46" | 1.168,4<br>46,0 | 1.441,0<br>56,75 | | 146<br>5,75 | 146,0<br>5,75 | 244,5<br>9,62 | 1.168,4<br>46 | 1.212,8<br>47,75 | 1.257,3<br>49,50 | 36 | 54<br>2,12 | 1.339,8<br>52,75 | 678<br>1.494 | 1.776<br>3.915 |
| 48" | 1.219,2<br>48,0 | 1.511,0<br>59,50 | | 152,4<br>6 | 152,4<br>6 | 257,2<br>10,12 | 1.219,2<br>48 | 1.266,8<br>49,88 | 1.308,1<br>51,50 | 28 | 60,3<br>2,38 | 1.403,4<br>55,25 | 802<br>1.767 | 2.043<br>4.504 |
| 50" | 1.270,0<br>50,0 | 1.568,0<br>61,75 | | 158,8<br>6,25 | 157,2<br>6,19 | 268,3<br>10,56 | 1.270,0<br>50 | 1.320,8<br>52 | 1.362,1<br>53,62 | 32 | 60,3<br>2,38 | 1.460,5<br>57,50 | 885<br>1.950 | 2.294<br>5.057 |
| 52" | 1.320,8<br>52,0 | 1.619,0<br>63,75 | | 163,5<br>6,44 | 161,9<br>6,38 | 276,2<br>10,88 | 1.320,8<br>52 | 1.371,6<br>54 | 1.412,9<br>55,62 | 32 | 60,3<br>2,38 | 1.511,3<br>59,50 | 1.020<br>2.247 | 2.500<br>5.511 |
| 54" | 1.371,6<br>54,0 | 1.702,0<br>67 | | 171,5<br>6,75 | 169,7<br>6,69 | 288,9<br>11,38 | 1.371,6<br>54 | 1.425,6<br>56,12 | 1.470,0<br>57,88 | 28 | 66,7<br>2,62 | 1.581,2<br>62,25 | 1.194<br>2.631 | 2.900<br>6.393 |
| 56" | 1.422,4<br>56,0 | 1.753,0<br>69 | | 176,2<br>6,94 | 174,6<br>6,88 | 298,4<br>11,75 | 1.422,4<br>56 | 1.479,6<br>58,25 | 1.527,2<br>60,12 | 32 | 66,7<br>2,62 | 1.632,0<br>64,25 | 1.262<br>2.781 | 3.174<br>6.997 |
| 58" | 1.473,2<br>58,0 | 1.803,0<br>71 | | 181<br>7,12 | 177,8<br>7 | 306,4<br>12,06 | 1.473,2<br>58 | 1.530,4<br>60,25 | 1.578,0<br>62,12 | 32 | 66,7<br>2,62 | 1.682,8<br>66,25 | 1.322<br>2.913 | 3.462<br>7.632 |
| 60" | 1.524,0<br>60,0 | 1.886,0<br>74,25 | | 188,9<br>7,44 | 185,7<br>7,31 | 319,1<br>12,56 | 1.524,0<br>60 | 1.584,3<br>62,38 | 1.635,1<br>64,38 | 32 | 73,0<br>2,88 | 1.752,6<br>69 | 1.550<br>3.414 | 3.940<br>8.687 |

NEUMIRA

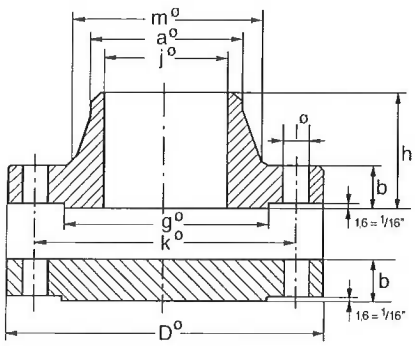


# BRIDAS WELDING NECK Y BLIND
# WELDING NECK AND BLIND FLANGES
# 600 Lbs.

**ASME B16.47 - 1996. Serie B**

| Tubo Pipe | | Brida Flange | | | | | Cuello Hub | | Resalte Raised face | Taladros Drilling template | | | Peso aprox. Approx. weight kg. Pounds | |
|---|---|---|---|---|---|---|---|---|---|---|---|---|---|---|
| Diámetro nominal del tubo Nominal Pipe size | OD mm inches | D mm inches | J mm inches | b Blind mm inches | b Welding Neck mm inches | h mm inches | a mm inches | m mm inches | g mm inches | Número Number | l mm inches | k mm inches | Welding Neck | Blind |
| 26" | 660,4<br>26,0 | 889,0<br>35 | Debe ser especificado por el comprador<br>To be specified by purchaser | 111,1<br>4,38 | 111,1<br>4,38 | 181,0<br>7,12 | 660,4<br>26 | 698,5<br>27,5 | 727,1<br>28,62 | 28 | 44,4<br>1,75 | 806,4<br>31,75 | 267<br>588 | 503,54<br>1.110 |
| 28" | 711,2<br>28,0 | 952,0<br>37,50 | | 115,9<br>4,56 | 115,9<br>4,56 | 190,5<br>7,5 | 711,2<br>28 | 752,5<br>29,62 | 784,2<br>30,88 | 28 | 47,6<br>1,88 | 863,6<br>34 | 326<br>718 | 602,28<br>1.328 |
| 30" | 762<br>30,0 | 1.022,0<br>40,25 | | 127<br>5,00 | 125,4<br>4,94 | 204,8<br>8,06 | 762,0<br>30 | 806,4<br>31,75 | 841,4<br>33,12 | 28 | 50,8<br>2 | 927,1<br>36,50 | 402<br>885 | 761,26<br>1.678 |
| 32" | 812,8<br>32,0 | 1.086,0<br>42,75 | | 135<br>5,31 | 130,2<br>5,12 | 215,9<br>8,50 | 812,8<br>32 | 860,4<br>33,88 | 895,4<br>35,25 | 28 | 54,0<br>2,12 | 984,2<br>38,95 | 462<br>1.019 | 913,68<br>2.014 |
| 34" | 863,6<br>34,0 | 1.162,0<br>45,75 | | 144,3<br>5,68 | 141,3<br>5,56 | 233,4<br>9,19 | 863,6<br>34 | 914,4<br>36 | 952,5<br>37,50 | 24 | 60,3<br>2,38 | 1.054,1<br>41,50 | 582<br>1.282 | 1.123,63<br>2.478 |
| 36" | 914,4<br>36,0 | 1.213,0<br>47,75 | | 150,9<br>5,94 | 146,0<br>5,75 | 242,9<br>9,56 | 914,4<br>36 | 968,4<br>38,12 | 1.009,6<br>39,75 | 28 | 60,3<br>2,38 | 1.104,9<br>43,50 | 627<br>1.382 | 1.274,18<br>2.809 |
| 38" | 965,2<br>38,0 | 1.270,0<br>50 | | 155,6<br>6,12 | 152,4<br>6 | 254,0<br>10 | 965,2<br>38 | 1.022,4<br>40,25 | 1.054,1<br>41,50 | 28 | 60,3<br>2,38 | 1.162,0<br>45,75 | 707<br>1.558 | 1.447<br>3.190 |
| 40" | 1.016<br>40,0 | 1.321,0<br>52 | | 161,9<br>6,38 | 158,8<br>6,25 | 263,5<br>10,38 | 1.016,0<br>40 | 1.073,2<br>42,25 | 1.111,2<br>43,75 | 32 | 60,3<br>2,38 | 1.212,8<br>47,75 | 762<br>1.680 | 1.620<br>3.571 |
| 42" | 1.066,8<br>42,0 | 1.403,0<br>55,25 | | 171,5<br>6,75 | 168,3<br>6,62 | 279,4<br>11 | 1.068,8<br>42 | 1.127,1<br>44,38 | 1.168,4<br>46 | 28 | 66,7<br>2,62 | 1.282,7<br>50,50 | 928<br>2.044 | 1.948<br>4.294 |
| 44" | 1.117,6<br>44,0 | 1.454,0<br>57,25 | | 177,8<br>7 | 173,0<br>6,81 | 288,9<br>11,38 | 1.117,6<br>44 | 1.181,1<br>46,50 | 1.225,6<br>48,25 | 32 | 66,7<br>2,62 | 1.333,5<br>52,50 | 992<br>2.185 | 2.100<br>4.630 |
| 46" | 1.168,4<br>46,0 | 1.511,0<br>59,50 | | 185,7<br>7,31 | 179,4<br>7,06 | 300,0<br>11,81 | 1.168,4<br>46 | 1.235,1<br>48,62 | 1.276,4<br>50,25 | 32 | 66,7<br>2,62 | 1.390,6<br>54,75 | 1.100<br>2.424 | 2.450<br>5.401 |
| 48" | 1.219,2<br>48,0 | 1.594,0<br>62,75 | | 195,3<br>7,69 | 188,9<br>7,44 | 315,9<br>12,44 | 1.219,2<br>48 | 1.289,0<br>50,75 | 1.333,5<br>52,50 | 32 | 73,0<br>2,88 | 1.460,5<br>57,50 | 1.299<br>2.862 | 2.850<br>6.283 |
| 50" | 1.270,0<br>50,0 | 1.670,0<br>65,75 | | 203,2<br>8 | 196,8<br>7,75 | 328,6<br>12,94 | 1.270,0<br>50 | 1.343,0<br>52,88 | 1.384,3<br>54,50 | 28 | 79,4<br>3,12 | 1.524,0<br>60 | 1.524<br>3.357 | 3.233<br>7.127 |
| 52" | 1.320,8<br>52,0 | 1.721,0<br>67,75 | | 209,55<br>8,25 | 203,2<br>8 | 336,6<br>13,25 | 1.320,8<br>52 | 1.393,8<br>54,88 | 1.435,1<br>56,50 | 32 | 79,4<br>3,12 | 1.574,8<br>62 | 1.585<br>3.492 | 3.570<br>7.870 |
| 54" | 1.371,6<br>54,0 | 1.778,0<br>70 | | 217,5<br>8,56 | 209,6<br>8,25 | 349,2<br>13,75 | 1.371,6<br>54 | 1.447,8<br>57 | 1.492,2<br>58,75 | 32 | 79,4<br>3,12 | 1.632,0<br>64,25 | 1.735<br>3.823 | 3.968<br>8.747 |
| 56" | 1.422,4<br>56,0 | 1.854,0<br>73 | | 225,4<br>8,88 | 217,5<br>8,56 | 362,0<br>14,25 | 1.422,4<br>56 | 1.501,8<br>59,12 | 1.543,0<br>60,75 | 32 | 85,7<br>3,38 | 1.691,4<br>66,75 | 1.952<br>4.300 | 4.450<br>9.810 |
| 58" | 1.473,2<br>58,0 | 1.905,0<br>75 | | 231,8<br>9,12 | 222,2<br>8,75 | 369,9<br>14,56 | 1.473,2<br>58 | 1.552,6<br>61,12 | 1.600,2<br>63 | 32 | 85,7<br>3,38 | 1.746,2<br>68,75 | 2.069<br>4.559 | 4.850<br>10.692 |
| 60" | 1.524,0<br>60,0 | 1.994,0<br>78,50 | | 242,9<br>9,56 | 233,4<br>9,19 | 388,9<br>15,31 | 1.524,0<br>60 | 1.609,7<br>63,38 | 1.657,4<br>65,25 | 28 | 92,1<br>3,62 | 1.822,4<br>71,75 | 2.474<br>5.451 | 5.588<br>12.319 |

NEUMIRA

## BRIDAS WELDING NECK Y BLIND
## WELDING NECK AND BLIND FLANGES
## 900 Lbs.

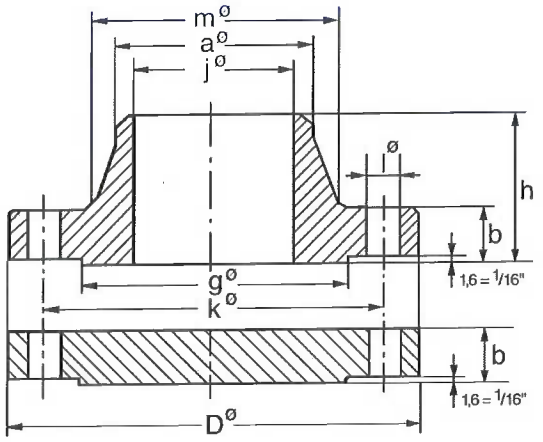


ASME B16.47 - 1996. Serie B

| Tubo Pipe | | Brida Flange | | | | | Cuello Hub. | | Resalte Raised face | Taladros Drilling template | | | Peso aprox. Approx. weight kg. Pounds | |
|---|---|---|---|---|---|---|---|---|---|---|---|---|---|---|
| Diámetro nominal del tubo Nominal Pipe size | OD mm inches | D mm inches | J mm inches | b Blind mm inches | b Welding Neck mm inches | h mm inches | a mm inches | m mm inches | g mm inches | Número Number | l mm inches | k mm inches | Welding Neck | Blind |
| 26" | 660,4<br>26,0 | 1.022,0<br>40,25 | Debe ser especificado por el comprador<br>To be specified by purchaser | 153,9<br>6,06 | 134,9<br>5,31 | 258,8<br>10,19 | 660,4<br>26,0 | 743,0<br>29,25 | 762,0<br>30,0 | 20 | 66,7<br>2,62 | 901,7<br>35,50 | 564<br>1,243 | 906,63<br>1,999 |
| 28" | 711,2<br>28,0 | 1.105,0<br>43,50 | | 166,6<br>6,56 | 147,6<br>5,81 | 276,2<br>10,88 | 711,2<br>28,0 | 796,9<br>31,38 | 819,2<br>32,25 | 20 | 73,0<br>2,88 | 971,6<br>38,25 | 706<br>1,556 | 1.144,70<br>2,524 |
| 30" | 762,0<br>30,0 | 1.181,0<br>46,50 | | 176<br>6,93 | 155,6<br>6,12 | 288,9<br>11,38 | 762,0<br>30,0 | 850,9<br>33,50 | 876,3<br>34,50 | 20 | 79,4<br>3,12 | 1.035,0<br>40,75 | 832,8<br>1,835 | 1.376,65<br>3,035 |
| 32" | 812,8<br>32,0 | 1.238,0<br>48,75 | | 185,7<br>7,31 | 160,3<br>6,31 | 303,2<br>11,94 | 812,8<br>32,0 | 908,0<br>35,75 | 927,1<br>36,50 | 20 | 79,4<br>3,12 | 1.092,2<br>43,0 | 919<br>2,025 | 1.610,38<br>3,550 |
| 34" | 863,6<br>34,0 | 1.314,0<br>51,75 | | 195<br>7,68 | 171,4<br>6,75 | 319,1<br>12,56 | 863,6<br>34,0 | 962,0<br>37,88 | 990,6<br>39,0 | 20 | 85,7<br>3,38 | 1.155,7<br>45,50 | 1.105<br>2,435 | 1.899,20<br>4,187 |
| 36" | 914,4<br>36,0 | 1.346,0<br>53 | | 201,7<br>7,94 | 173,0<br>6,81 | 325,4<br>12,81 | 914,4<br>36,0 | 1.016,0<br>40,0 | 1.028,7<br>40,50 | 24 | 79,4<br>3,12 | 1.200,2<br>47,25 | 1.124<br>2,476 | 2.064,81<br>4,552 |
| 38" | 965,2<br>38,0 | 1.460,0<br>57,50 | | 215,9<br>8,50 | 190,5<br>7,50 | 352,4<br>13,88 | 965,2<br>38,0 | 1.073,2<br>42,25 | 1.099,0<br>43,25 | 20 | 92,1<br>3,62 | 1.289,0<br>50,75 | 1.495<br>3,294 | 2.610<br>5,754 |
| 40" | 1.016,0<br>40,0 | 1.511,0<br>59,50 | | 223,8<br>8,81 | 196,8<br>7,75 | 363,5<br>14,31 | 1.016,0<br>40,0 | 1.127,1<br>44,38 | 1.162,0<br>45,75 | 24 | 92,1<br>3,62 | 1.339,8<br>52,75 | 1.584<br>3,490 | 2.870<br>6,327 |
| 42" | 1.066,8<br>42,0 | 1.562,0<br>61,50 | | 231,8<br>9,12 | 206,4<br>8,12 | 371,5<br>14,62 | 1.066,8<br>42,0 | 1.176,3<br>46,31 | 1.212,8<br>47,75 | 24 | 92,1<br>3,62 | 1.390,6<br>54,75 | 1.718<br>3,785 | 3.195<br>7,044 |
| 44" | 1.117,6<br>44,0 | 1.648,0<br>64,88 | | 242,9<br>9,56 | 214,3<br>8,44 | 390,5<br>15,38 | 1.117,6<br>44,0 | 1.235,1<br>48,63 | 1.270,0<br>50,0 | 24 | 98,4<br>3,88 | 1.463,7<br>57,62 | 2.006<br>4,420 | 3.720<br>8,201 |
| 46" | 1.168,4<br>46.0 | 1.734,0<br>68,25 | | 255,6<br>10,06 | 225,4<br>8,88 | 411,2<br>16,18 | 1.168,4<br>46,0 | 1.292,2<br>50,88 | 1.333,5<br>52,50 | 24 | 104,8<br>4,12 | 1.536,7<br>60,50 | 2.337<br>5,150 | 4.579<br>10,095 |
| 48" | 1.219,2<br>48,0 | 1.784,0<br>70,25 | | 263,5<br>10,38 | 233,4<br>9,19 | 419,7<br>16,50 | 1.219,2<br>48 | 1.343,0<br>52,88 | 1.384,3<br>54,50 | 24 | 104,8<br>4,12 | 1.587,5<br>62,50 | 2.509<br>5,529 | 4.730<br>10,428 |

**TABLE 1 Heat Treating Requirements**

| Grade | Heat Treat Type | Austenitizing / Solutioning Temperature, min °F (°C) [A] | Cooling Media | Quenching Cool Below °F (°C) | Tempering Temperature, min °F (°C) |
|---|---|---|---|---|---|
| Austenitic Stainless Steels | | | | | |
| F 304 | solution treat and quench | 1900 [1040] | liquid | 500 [260] | B |
| F 304H | solution treat and quench | 1900 [1040] | liquid | 500 [260] | B |
| F 304L | solution treat and quench | 1900 [1040] | liquid | 500 [260] | B |
| F 304N | solution treat and quench | 1900 [1040] | liquid | 500 [260] | B |
| F 304LN | solution treat and quench | 1900 [1040] | liquid | 500 [260] | B |
| F 309H | solution treat and quench | 1900 [1040] | liquid | 500 [260] | B |
| F 310 | solution treat and quench | 1900 [1040] | liquid | 500 [260] | B |
| F 310H | solution treat and quench | 1900 [1040] | liquid | 500 [260] | B |
| F 310MoLn | solution treat and quench | 1900-2010 [1050-1100] | liquid | 500 [260] | B |
| F 316 | solution treat and quench | 1900 [1040] | liquid | 500 [260] | B |
| F 316H | solution treat and quench | 1900 [1040] | liquid | 500 [260] | B |
| F 316L | solution treat and quench | 1900 [1040] | liquid | 500 [260] | B |
| F 316N | solution treat and quench | 1900 [1040] | liquid | 500 [260] | B |
| F 316LN | solution treat and quench | 1900 [1040] | liquid | 500 [260] | B |
| F 317 | solution treat and quench | 1900 [1040] | liquid | 500 [260] | B |
| F 317L | solution treat and quench | 1900 [1040] | liquid | 500 [260] | B |
| F 347 | solution treat and quench | 1900 [1040] | liquid | 500 [260] | B |
| F 347H | solution treat and quench | 2000 [1095] | liquid | 500 [260] | B |
| F 348 | solution treat and quench | 1900 [1040] | liquid | 500 [260] | B |
| F 348H | solution treat and quench | 2000 [1095] | liquid | 500 [260] | B |
| F 321 | solution treat and quench | 1900 [1040] | liquid | 500 [260] | B |
| F 321H | solution treat and quench | 2000 [1095] | liquid | 500 [260] | B |
| F XM-11 | solution treat and quench | 1900 [1040] | liquid | 500 [260] | B |
| F XM-19 | solution treat and quench | 1900 [1040] | liquid | 500 [260] | B |
| F 10 | solution treat and quench | 1900 [1040] | liquid | 500 [260] | B |
| F 20 | solution treat and quench | 1700-1850 [925-1010] | liquid | 500 [260] | B |
| F 44 | solution treat and quench | 2100 [1150] | liquid | 500 [260] | B |
| F 45 | solution treat and quench | 1900 [1040] | liquid | 500 [260] | B |
| F 46 | solution treat and quench | 2010-2140 [1100-1140] | liquid | 500 [260] | B |
| F 47 | solution treat and quench | 1900 [1040] | liquid | 500 [260] | B |
| F 48 | solution treat and quench | 1900 [1040] | liquid | 500 [260] | B |
| F 49 | solution treat and quench | 2050 [1120] | liquid | 500 [260] | B |
| F 56 | solution treat and quench | 2050-2160 [1120-1180] | liquid | 500 [260] | B |
| F 58 | solution treat and quench | 2085 [1140] | liquid | 500 [260] | B |
| F 62 | solution treat and quench | 2025 [1105] | liquid | 500 [260] | B |
| Ferritic-Austenitic Stainless Steels | | | | | |
| F 50 | solution treat and quench | 1925 [1050] | liquid | 500 [260] | B |
| F 51 | solution treat and quench | 1870 [1020] | liquid | 500 [260] | B |
| F 52[C] | | | liquid | 500 [260] | B |
| F 53 | solution treat and quench | 1880 [1025] | liquid | 500 [260] | B |
| F 54 | solution treat and quench | 1920-2060 [1050-1125] | liquid | 500 [260] | B |
| F 55 | solution treat and quench | 2010-2085 [1100-1140] | liquid | 500 [260] | B |
| F 57 | solution treat and quench | 1940 [1060] | liquid | 175 [80] | B |
| F 59 | solution treat and quench | 1975-2050 [1080-1120] | liquid | 500 [260] | B |
| F 60 | solution treat and quench | 1870 [1020] | liquid | 500 [260] | B |
| F 61 | solution treat and quench | 1920-2060 [1050-1125] | liquid | 500 [260] | B |

A Minimun unless temperature range is listed.

B Not applicable.

C Grade F 52 shall be solution treated at 1825 to 1875° F [995 to 1025° C] 30 min/in. of thickness and water quenched.

TABLE 2 Chemical Requirements

| Identification Symbol | UNS Designation | Grade | Composition, % | | | | | | | | | | |
|---|---|---|---|---|---|---|---|---|---|---|---|---|---|
| | | | Carbon | Manganese | Phosphorus, max. | Sulfur, max. | Silicon | Nickel | Chromium | Molybdenum | Columbium plus Tantalum | Tantalum, max. | Titanium |
| Austenitic Stainless Steels | | | | | | | | | | | | | |
| F 304 [E] | S30400 | 18 chromium, 8 nickel | 0.80 max. | 2.00 max. | 0.045 | 0.030 | 1.00 max. | 8.0 - 11.0 | 18.0 - 20.0 | ... | ... | ... | ... |
| F 304H | S30409 | 18 chromium, 8 nickel | 0.04 - 0.10 | 2.00 max. | 0.045 | 0.030 | 1.00 max. | 8.0 - 11.0 | 18.0 - 20.0 | ... | ... | ... | ... |
| F 304L [E] | S30403 | 18 chromium, 8 nickel, low carbon | 0.030 max. | 2.00 max. | 0.045 | 0.030 | 1.00 max. | 8.0 - 13.0 | 18.0 - 20.0 | ... | ... | ... | ... |
| F 304N [F] | S30451 | 18 chromium, 8 nickel, modifief with nitrogen | 0.80 max. | 2.00 max. | 0.045 | 0.030 | 1.00 max. | 8.0 - 10.5 | 18.0 - 20.0 | ... | ... | ... | ... |
| F 304LN [F] | S30453 | 18 chromium, 8 nickel, modified with nitrogen | 0.030 max. | 2.00 max. | 0.045 | 0.030 | 1.00 max. | 8.0 - 10.5 | 18.0 - 20.0 | ... | ... | ... | ... |
| F 309H | S30909 | 23 chromium, 13.5 nickel | 0.04 - 0.10 | 2.00 max. | 0.045 | 0.030 | 1.00 max. | 12.0 - 15.0 | 22.0 - 24.0 | ... | ... | ... | ... |
| F 310 | S31000 | 25 chromium, 20 nickel | 0.25 max. | 2.00 max. | 0.045 | 0.030 | 1.00 max. | 19.0 - 22.0 | 24.0 - 26.0 | ... | ... | ... | ... |
| F 310H [F] | S31009 | 25 chromium, 20 nickel | 0.04 - 0.10 | 2.00 max. | 0.045 | 0.030 | 1.00 max. | 19.0 - 22.0 | 24.0 - 26.0 | ... | ... | ... | ... |
| F 310MoLN [F] | S31050 | 25 chromium, 22 nickel, modified with molybdenum and nitrogen, low carbon | 0.020 max. | 2.00 max. | 0.030 | 0.010 | 0.050 max. | 20.5 - 23.5 | 24.0 - 26.0 | 1.60 - 2.60 | ... | Other Elements N 0.09 - 0.15 | |
| F 316 [E] | S31600 | 18 chromium, 8 nickel, modified with molybdenum | 0.08 max. | 2.00 max. | 0.045 | 0.030 | 1.00 max. | 10.0 - 14.0 | 16.0 - 18.0 | 2.00 - 3.00 | ... | ... | ... |
| F 316H | S31609 | 18 chromium, 8 nickel, modified with molybdenum | 0.04 - 0.10 | 2.00 max. | 0.045 | 0.030 | 1.00 max. | 10.0 - 14.0 | 16.0 - 18.0 | 2.00 - 3.00 | ... | ... | ... |
| F 316L [E] | S31603 | 18 chromium, 8 nickel, modified with molybdenum low carbon | 0.030 max. | 2.00 max. | 0.045 | 0.030 | 1.00 max. | 10.0 - 15.0 | 16.0 - 18.0 | 2.00 - 3.00 | ... | ... | ... |
| F 316N [F] | S31651 | 18 chromium, 8 nickel, modified with molybdenum and nitrogen | 0.08 max. | 2.00 max. | 0.045 | 0.030 | 1.00 max. | 11.0 - 14.0 | 16.0 - 18.0 | 2.00 - 3.00 | ... | ... | ... |
| F 316LN [F] | S31653 | 18 chromium, 8 nickel, modified with molybdenum and nitrogen | 0.030 max. | 2.00 max. | 0.045 | 0.030 | 1.00 max. | 11.0 - 14.0 | 16.0 - 18.0 | 2.00 - 3.00 | ... | ... | ... |
| F 317 | S31700 | 19 chromium, 13 nickel, 3.5 molybdenum | 0.08 max. | 2.00 max. | 0.045 | 0.030 | 1.00 max. | 11.0 - 15.0 | 18.0 - 20.0 | 3.0 - 4.0 | ... | ... | ... |
| F 317L | S31703 | 19 chromium, 13 nickel, 3.5 molybdenum | 0.030 max. | 2.00 max. | 0.045 | 0.030 | 1.00 max. | 11.0 - 15.0 | 18.0 - 20.0 | 3.0 - 4.0 | ... | ... | ... |
| F 321 | S32100 | 18 chromium, 8 nickel, modified with titanium | 0.08 max. | 2.00 max. | 0.045 | 0.030 | 1.00 max. | 9.0 - 12.0 | 17.0 - 19.0 | ... | ... | ... | [G] |
| F 321H | S32109 | 18 chromium, 8 nickel, modified with titanium | 0.04 - 0.10 | 2.00 max. | 0.045 | 0.030 | 1.00 max. | 9.0 - 12.0 | 17.0 - 19.0 | ... | ... | ... | [H] |
| F 347 | S34700 | 18 chromium, 8 nickel, modified with columbium | 0.08 max. | 2.00 max. | 0.045 | 0.030 | 1.00 max. | 9.0 - 13.0 | 17.0 - 20.0 | ... | [I] | ... | ... |
| F 347H | S34709 | 18 chromium, 8 nickel, modified with columbium | 0.04 - 0.10 | 2.00 max. | 0.045 | 0.030 | 1.00 max. | 9.0 - 13.0 | 17.0 - 20.0 | ... | [J] | ... | ... |
| F 348 | S34800 | 18 chromium, 8 nickel, modified with columbium | 0.08 max. | 2.00 max. | 0.045 | 0.030 | 1.00 max. | 9.0 - 13.0 | 17.0 - 20.0 | ... | [I] | 0.10 Other Elements Co 0.20 max. | |
| F 348H | S34809 | 18 chromium, 8 nickel, modified with columbium | 0.04 - 0.10 | 2.00 max. | 0.045 | 0.030 | 1.00 max. | 9.0 - 13.0 | 17.0 - 20.0 | ... | [J] | 0.10 Other Elements Co 0.20 max. | |
| F XM-11 | S21904 | 20 chromium, 6 nickel, 9 manganese | 0.040 max. | 8.0 - 10.0 | 0.060 | 0.030 | 1.00 max. | 5.5 - 7.5 | 19.0 - 21.5 | ... | ... | Other Elements N 0.15 - 0.40 | |
| F XM-19 | S20910 | 22 chromium, 13 nickel, 5 manganese | 0.06 max. | 4.0 - 6.0 | 0.040 | 0.030 | 1.00 max. | 11.5 - 13.5 | 20.5 - 23.5 | 1.50 - 3.00 | 0.10 - 0.30 | Other Elements N 0.20 - 0.40 V 0.10 - 0.30 | |
| F 10 | S33100 | 20 nickel, 8 chromium | 0.10 - 0.20 | 0.50 - 0.80 | 0.040 | 0.030 | 1.00 - 1.40 | 19.0 - 22.0 | 7.0 - 9.0 | ... | ... | ... | ... |
| F 20 | N08020 | 35 nickel, 20 chromium, 3.5 copper, 2.5 molybdenum | 0.07 max. | 2.00 max. | 0.045 | 0.035 | 1.00 max. | 32.0 - 38.0 | 19.0 - 21.0 | 2.00 - 3.00 | 8xC min - 1.00 max | Other Elements Cu 3.0 - 4.0 | |

**TABLE 2 Chemical Requirements (Continued)**

| Identification Symbol | UNS Designation | Grade | Composition, % | | | | | | | | | | |
|---|---|---|---|---|---|---|---|---|---|---|---|---|---|
| | | | Carbon | Manganese | Phosphorus, max. | Sulfur, max. | Silicon | Nickel | Chromium | Molybdenum | Columbium plus Tantalum | Tantalum, max. | Titanium |
| Austenitic Stainless Steels (continued) | | | | | | | | | | | | | |
| F 44 | S31254 | 20 chromium, 18 nickel, 6 molybdenum, low carbon | 0.020 max. | 1.00 max. | 0.030 | 0.010 | 0.80 max. | 17.5 - 18.5 | 19.5 - 20.5 | 6.0 - 6.5 | ... | Other Elements Cu 0.50 - 1.00 N 0.18 - 0.22 | |
| F 45 | S30815 | 21 chromium, 11 nickel, modified with nitrogen and cerium | 0.05 - 0.10 | 0.80 max. | 0.040 | 0.030 | 1.40 - 2.00 | 10.0 - 12.0 | 20.0 - 22.0 | ... | ... | Other Elements N 0.14 - 0.20 Ce = 0.03 - 0.08 | |
| F 46 | S30600 | 18 chromium, 15 nickel, 4 silicon | 0.018 max. | 2.00 max. | 0.020 | 0.020 | 3.7 - 4.3 | 14.0 - 15.5 | 17.0 - 18.5 | 0.20 max. | ... | Other Elements Cu 0.50 max. | |
| F 47 | S31725 | 19 chromium, 15 nickel, 4 molybdenum | 0.030 max. | 2.00 max. | 0.045 | 0.030 | 0.75 max. | 13.0 - 17.5 | 18.0 - 20.0 | 4.0 - 5.0 | ... | Other Elements N 0.10 max. | |
| F 48 | S31726 | 19 chromiun, 15 nickel, 4 molybdenum | 0.030 max. | 2.00 max. | 0.045 | 0.030 | 0.75 max. | 13.5 - 17.5 | 17.0 - 20.0 | 4.0 - 5.0 | ... | Other Elements N 0.10 - 0.20 | |
| F 49 | S34565 | 24 chromium, 17 nickel, 6 manganese, 5 molybdenum | 0.030 max. | 5.0 - 7.0 | 0.030 | 0.010 | 1.00 max. | 16.0 - 18.0 | 23.0 - 25.0 | 4.0 - 5.0 | 0.10 | Other Elements N 0.40 - 0.60 | |
| F 56 | S33228 | 32 nickel, 27 chromium, with columbium | 0.04 - 0.08 | 1.00 max. | 0.020 | 0.015 | 0.30 max. | 31.0 - 33.0 | 26.0 - 28.0 | ... | 0.6 - 1.0 | Other Elements Ce 0.05 - 0.10 Al 0.025 | |
| F 58 | N08367 | 21 chromium, 25 nickel, 6.5 molybdenum | 0.030 max | 2.0 - 4.0 | 0.035 | 0.020 | 1.00 max. | 21.0 - 24.0 | 23.0 - 25.0 | 5.2 - 6.2 | ... | Other Elements N 0.35 - 0.60 Cu 1.00 - 2.50 W 1.50 - 2.50 | |
| F 62 | N08367 | 21 chromium, 25 nickel, 6.5 molybdenum | 0.030 max. | 2.0 max. | 0.040 | 0.030 | 1.00 max. | 23.50 - 25.50 | 20.00 - 22.00 | 6.00 - 7.00 | ... | Other Elements N 0.18 - 0.25 Cu 0.75 max. | |
| Ferritic-Austenitic Stainless Steels | | | | | | | | | | | | | |
| F 50 | S31200 | 25 chromium, 6 nickel, modified with nitrogen | 0.030 max. | 2.00 max. | 0.045 | 0.030 | 1.00 max. | 5.5 - 6.5 | 24.0 - 26.0 | 1.20 - 2.00 | ... | Other Elements N 0.14 - 0.20 | |
| F 51 | S31803 | 22 chromium, 5.5 nickel, modified with nitrogen | 0.030 max. | 2.00 max. | 0.030 | 0.020 | 1.00 max. | 4.5 - 6.5 | 21.0 - 23.0 | 2.5 - 3.5 | ... | Other Elements N 0.08 - 0.20 | |
| F 52 | S32950 | 26 chromium, 3.5 nickel, 1.0 molybdenum | 0.030 max. | 2.00 max. | 0.035 | 0.010 | 0.60 max. | 3.5 - 5.2 | 26.0 - 29.0 | 1.00 - 2.50 | ... | Other Elements N 0.15 - 0.35 | |
| F 53 | S32750 | 25 chromium, 7 nickel, 4 molybdenum, modified with nitrogen | 0.030 max. | 1.20 max. | 0.035 | 0.020 | 0.80 max. | 6.0 - 8.0 | 24.0 - 26.0 | 3.0 - 5.0 | ... | Other Elements N 0.24 - 0.32 Cu 0.50 max. | |
| F 54 | S39274 | 25 chromium, 7 nickel, modified with nitrogen and tungsten | 0.030 max. | 1.00 max. | 0.030 | 0.020 | 0.80 max. | 6.0 - 8.0 | 24.0 - 26.0 | 2.5 - 3.5 | ... | Other Elements N 0.24 - 0.32 Cu 0.20 - 0.80 W 1.50 - 2.50 | |
| F 55 | S32760 | 25 chromium, 7 nickel, 3.5 molybdenum, modified with nitrogen and tungsten | 0.030 max. | 1.00 max. | 0.030 | 0.010 | 1.00 max. | 6.0 - 8.0 | 24.0 - 26.0 | 3.0 - 4.0 | ... | Other Elements N 0.20 - 0.30 Cu 0.50 - 1.00 W 0.50 - 1.00[K] | |
| F 57 | S39277 | 26 chromium, 7 nickel, 3.7 molybdenum | 0.025 max. | 0.80 max. | 0.025 | 0.002 | 0.80 max. | 6.5 - 8.0 | 24.0 - 26.0 | 3.0 - 4.0 | ... | Other Elements Cu 1.20 - 2.00 W 0.80 - 1.20 N 0.23 - 0.33 | |
| F 59 | S32520 | 25 chromium, 6.5 nickel, 4 molybdenum with nitrogen | 0.030 max. | 1.50 max. | 0.035 | 0.020 | 0.80 max. | 5.5 - 8.0 | 24.0 - 26.0 | 3.0 - 5.0 | ... | Other Elements N 0.20 - 0.35 Cu 0.50 - 3.00 | |
| F 60 | S32205 | 22 chromium, 5.5 nickel, 3 molybdenum, modified with nitrogen | 0.030 max. | 2.00 | 0.030 | 0.020 | 1.00 | 4.5 - 6.5 | 22.0 - 23.0 | 3.0 - 3.5 | ... | N 0.14 -0.20 | |
| F 61 | S32550 | 26 chromium, 6 nickel, 3.5 molybdenum with nitrogen and copper | 0.04 max. | 1.50 max. | 0.040 | 0.030 | 1.00 max. | 4.5 - 6.5 | 24.0 - 27.0 | 2.9 - 3.9 | ... | Other Elements Cu 1.50 - 2.50 N 0.10 - 0.25 | |

[E] Grades F 304, F 304L, F 316, and F 316L shall have a maximum nitrogen content of 0.10 %.

[F] Grades F 304N, F 316N, F 304LN, and F 316LN shall have a nitrogen content of 0.10 to 0.16 %.

[G] Grade F 321 shall have a titanium content of not less than five times the carbon content and not more than 0.70 %.

[H] Grade F 321H shall have a titanium content of not less than 4 times the carbon content and not more than 0.70 %.

[I] Grades F 347 and F 348 shall have a columbium content of not less than ten times the carbon content and not more than 1.10 %.

[J] Grades F 347H and F 348H shall have a columbium content of not less than 8 times the carbon content and not mores than 1.10 %.

[K] % Cr + 3.3 x % Mo + 16 x % N = 40 min.

TABLE 3 Tensile and Hardness Requirements

| Grade Symbol | Tensile Strength, min, ksi [MPa] | Yield Strength, min, ksi [MPa][A] | Elongation in 2 in. [50mm] or 4D, min, % | Reduction of Area min, % | Brinell Hardness Number |
|---|---|---|---|---|---|
| Austenitic Stainless Steels | | | | | |
| F 304 | 75 [515] [B] | 30 [205] | 30 | 50 | ... |
| F 304H | 75 [515] [B] | 30 [205] | 30 | 50 | ... |
| F 304L | 70 [485] [C] | 25 [170] | 30 | 50 | ... |
| F 304N | 80 [550] | 35 [240] | 30 [D] | 50 [E] | ... |
| F 304LN | 75 [515] [B] | 30 [205] | 30 | 50 | ... |
| F 309H | 75 [515] [B] | 30 [205] | 30 | 50 | ... |
| F 310 | 75 [515] [B] | 30 [205] | 30 | 50 | ... |
| F 310 MoLn | 78 [540] | 37 [255] | 25 | 40 | ... |
| F 310H | 75 [515] [B] | 30 [205] | 30 | 50 | ... |
| F 316 | 75 [515] [B] | 30 [205] | 30 | 50 | ... |
| F 316H | 75 [515] [B] | 30 [205] | 30 | 50 | ... |
| F 316L | 70 [485] [C] | 25 [170] | 30 | 50 | ... |
| F 316N | 80 [550] | 35 [240] | 30 [D] | 50 [E] | ... |
| F 316LN | 75 [515] [B] | 30 [205] | 30 | 50 | ... |
| F 317 | 75 [515] [B] | 30 [205] | 30 | 50 | ... |
| F 317L | 70 [485] [C] | 25 [170] | 30 | 50 | ... |
| F 347 | 75 [515] [B] | 30 [205] | 30 | 50 | ... |
| F 347H | 75 [515] [B] | 30 [205] | 30 | 50 | ... |
| F 348 | 75 [515] [B] | 30 [205] | 30 | 50 | ... |
| F 348H | 75 [515] [B] | 30 [205] | 30 | 50 | ... |
| F 321 | 75 [515] [B] | 30 [205] | 30 | 50 | ... |
| F 321H | 75 [515] [B] | 30 [205] | 30 | 50 | ... |
| F XM-11 | 90 [620] | 50 [345] | 45 | 60 | ... |
| F XM-19 | 100 [690] | 55 [380] | 35 | 55 | ... |
| F 10 | 80 [550] | 30 [205] | 30 | 50 | ... |
| F 20 | 80 [550] | 35 [240] | 30 | 50 | ... |
| F 44 | 94 [650] | 44 [300] | 35 | 50 | ... |
| F 45 | 87 [600] | 45 [310] | 40 | 50 | ... |
| F 46 | 78 [540] | 35 [240] | 40.0 | 50.0 | ... |
| F 47 | 75 [525] | 30 [205] | 40.0 | 50.0 | ... |
| F 48 | 80 [550] | 35 [240] | 40.0 | 50.0 | ... |
| F 49 | 115 [795] | 60 [415] | 35 | 40 | ... |
| F 56 | 73 [500] | 27 [185] | 30 | 35 | ... |
| F 58 | 109 [750] | 61 [420] | 35 | 50 | ... |
| F 62 | 95 [655] | 45 [310] | 30 | 50 | ... |
| Ferritic-Austenitic Stainless Steels | | | | | |
| F 50 | 100 - 130 [690 - 900] | 65 [450] | 25 | 50 | ... |
| F 51 | 90 [620] | 65 [450] | 25 | 45 | ... |
| F 52 | 100 [690] | 70 [485] | 15 | ... | ... |
| F 53 | 116 [800] [F] | 80 [550] [F] | 15 | ... | 310 max. |
| F 54 | 116 [800] | 80 [550] | 15 | 30 | 310 max. |
| F 55 | 109 - 130 [750 - 895] | 80 [550] | 25.0 | 45 | ... |
| F 57 | 118 [820] | 85 [585] | 25 | 50 | ... |
| F 59 | 112 [770] | 80 [550] | 25 | 40 | ... |
| F 60 | 95 [655] | 70 [485] | 25 | 45 | ... |
| F 61 | 109 [750] | 80 [550] | 25.0 | 50 | ... |

[A] Determined by the 0.2% offsset method. For ferritic steels only, the 0.5% extension-under-load method may also be used.

[B] For sections over 5 in. [130 mm] in thickness, the minimum tensile strength shall be 70 ksi [485 MPa].

[C] For sections over 5 in. [130 mm] in thickness, the minimum tensile strength shall be 65 ksi [450 MPa].

[D] Longitudinal. The transverse elongation shall be 25% in 2 in. or 50 mm, min.

[E] Longitudinal. The transverse reduction of area shall be 45% min.

[F] For sections over 2 in. [50 mm] in thickness, the minimum tensile strength shall be 106 ksi [730 MPa]; the minimum yield strength shall be 75 ksi [515MPa].

TABLE 4 Product Analysis Tolerances for Low Alloy Steels with a Maximun Chromium Limit of 4% or More and Stainless Steels[A]

| Elements | Limit or Maximun of Specified Range, % | Tolerance Over the Maximum Limit or Under the minimum Limit |
|---|---|---|
| Carbon | 0.030, incl | 0.005 |
| | over 0.030 to 0.20 incl | 0.01 |
| Manganese | to 1.00 incl | 0.03 |
| | over 1.00 to 3.00, incl | 0.04 |
| | over 3.00 to 6.00 | 0.05 |
| | over 6.00 to 10.00 | 0.06 |
| Phosphorus | to 0.040, incl | 0.005 |
| Sulfur | to 0.030, incl | 0.005 |
| Silicon | to 1.00, incl | 0.05 |
| | over 1.00 to 5.00, incl | 0.10 |
| Chromium | over 4.00 to 10.00, incl | 0.10 |
| | over 10.00 to 15.00, incl | 0.15 |
| | over 15.00 to 20.00, incl | 0.20 |
| | over 20.00 to 27.50, incl | 0.25 |
| Nickel | to 1.00, incl | 0.03 |
| | over 1.00 to 5.00, incl | 0.07 |
| | over 5.00 to 10.00, incl | 0.10 |
| | over 10.00 to 20.00, incl | 0.15 |
| | over 20.00 to 22.00, incl | 0.20 |
| Molybdenum | to 0.20 incl | 0.01 |
| | over 0.20 to 0.60, incl | 0.03 |
| | over 0.60 to 2.00, incl | 0.05 |
| | over 2.00 to 7.00, incl | 0.10 |
| Titanium | all ranges | 0.05 |
| Columbium-tantalum | all ranges | 0.05 |
| Tantalum | to 0.10, incl | 0.02 |
| Cobalt | 0.05 to 0.20, incl | 0.01[B] |
| Nitrogen | to 0.19 incl | 0.01 |
| | over 0.19 to 0.25 | 0.02 |
| | over 0.25 to 0.35 | 0.03 |
| | over 0.35 to 0.45 | 0.04 |
| | over 0.45 to 0.60 | 0.05 |
| Columbium | 0.05 to 0.20, incl | 0.01 |
| Aluminium | to 0.05 incl | 0.01 |
| Vanadium | to 0.10 incl | 0.01 |
| | over 0.10 to 0.25 incl | 0.02 |
| Cerium | 0.03 to 0.08 | - 0.0005 |
| | | + 0.01 |
| Tungsten | to 1.00, incl | 0.04 |
| Copper | to 1.00, incl | 0.03 |

[A] This table does not apply to heat analysis.

[B] Product analysis limits for cobalt under 0.05% have not been established and the producer should be consulted for those limits.

NEUMIRA

# *B. S. 3293 FLANGES*

NEUMIRA

## CARA DE JUNTA TIPO RING JOINT
## RING JOINT FACINGS

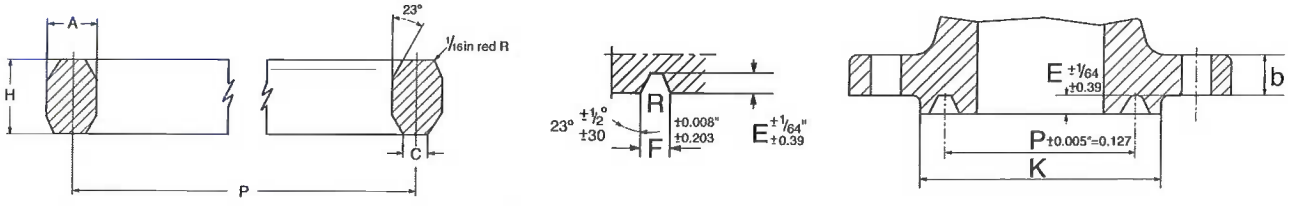


B.S. 3293 - 1960

| Nominal pipe size | Pitch diameter of ring P | Width of ring A | Height of ring H | Width of flat C | Ring number |
|---|---|---|---|---|---|
| in | in | in | in | in | |
| 26 | 29 1/2 | 3/4 | 15/16 | 0-485 | R 93 |
| 28 | 31 1/2 | 3/4 | 15/16 | 0-485 | R 94 |
| 30 | 33 3/4 | 3/4 | 15/16 | 0-485 | R 95 |
| | | | | | |
| 32 | 36 | 7/8 | 1 1/16 | 0-583 | R 96 |
| 34 | 38 | 7/8 | 1 1/16 | 0-583 | R 97 |
| 36 | 40 1/4 | 7/8 | 1 1/16 | 0-583 | R 98 |

NEUMIRA

## TOLERANCIAS
## (Bridas Welding Neck and Slip on)
## (Welding Neck and Slip on Flanges)

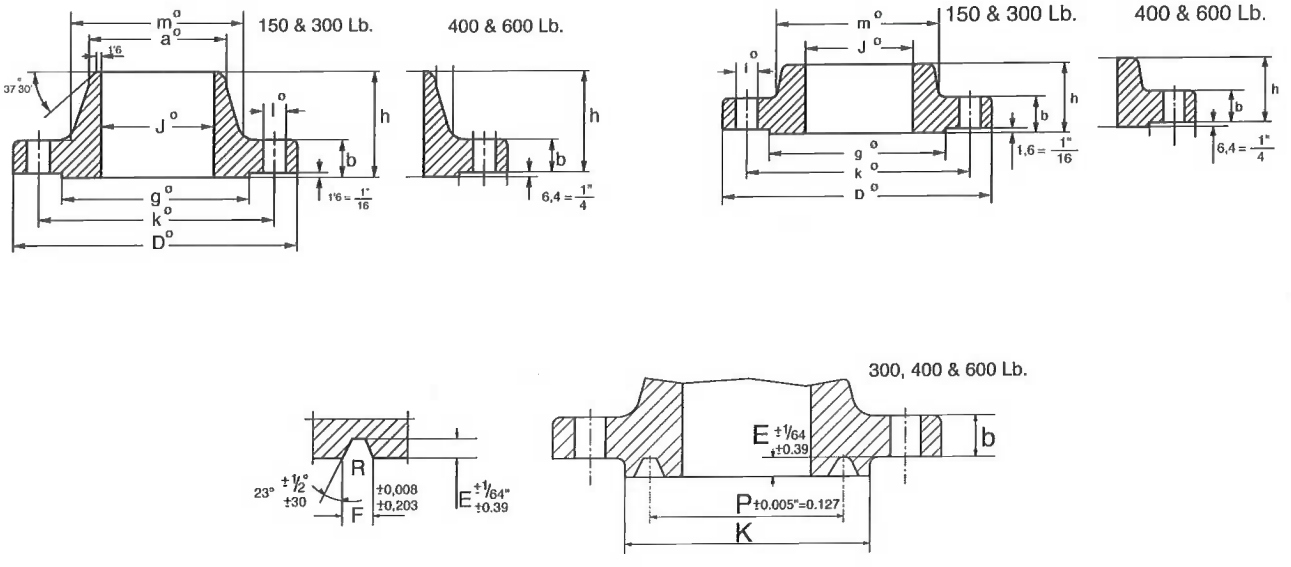


B.S. 3293 - 1960

| DIMENSIONES<br>DIMENSION | | | TOLERANCIAS/TOLERANCES | | | |
|---|---|---|---|---|---|---|
| | | | WN | SO | WN | SO |
| | | | inches | | mm | |
| D | Diámetro exterior *<br>Outside diameter * | | ± 0.12" | | ± 3,20 mm | |
| J | Diámetro interior<br>Inside diameter | | + 1/8"<br>- 1/16" | + 1/16"<br>- 0" | + 3,10 mm<br>- 1,50 mm | + 3,10 mm<br>- 0 mm |
| g | Diámetro de la cara de contacto (resalte)<br>Diameter of Contact Face | | ± 1/64" | | ± 0,30 mm | |
| a | Diámetro del cuello en el Punto de soldadura<br>Diameter of hub at point of welding | | + 5/32"<br>- 1/32" | | + 3,90 mm<br>- 0,8 mm | |
| h | Altura total de la brida.<br>Overall Length through Hub. | | ± 1/8" | | ± 3,10 mm | |
| b | Espesor<br>Thickness | | + 3/16"<br>- 0" | | + 4,70 mm<br>- 0 mm | |
| P | Diámetro del canal.<br>Pitch diameter. | Dimensiones del canal<br>Groove dimensions | ± 0,005" | | ± 0,12 mm | |
| F | Espesor<br>Width | | ± 0,008" | | ± 0,20 mm | |
| E | Profundidad<br>Depth | | +1/64"<br>- 0" | | +0,39 mm<br>- 0 mm | |

NEUMIRA

## BRIDAS WELDING NECK
## WELDING NECK FLANGES
## 150 Lbs.

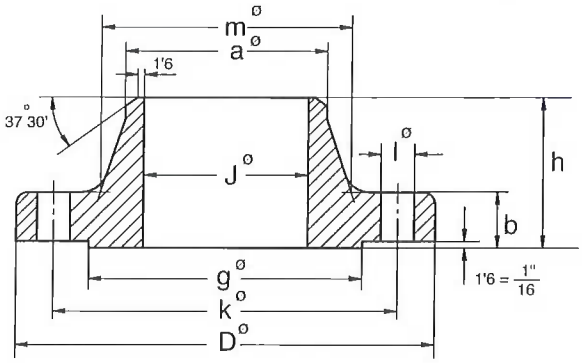


**B.S. 3293 - 1960**

| Tubo Pipe | | Brida Flange | | | | Cuello Hub. | | Resalte Raised face | Taladros Drilling template | | | Peso aprox. Approx. weight kg. Pounds |
|---|---|---|---|---|---|---|---|---|---|---|---|---|
| Diámetro nominal Nominal Pipe size | **OD** mm inches | **D** mm inches | **J** mm inches | **b** mm inches | **h** mm inches | **a** mm inches | **m** mm inches | **g** mm inches | Número Number | **l** mm inches | **k** mm inches | |
| 26" | 660,4<br>26,0 | 869,9<br>34 1/4 | Debe ser especificado por el comprador<br>To be specified by purchaser | 50,8<br>2 | 127,0<br>5 | 660,4<br>26 | 723,9<br>28 1/2 | 742,9<br>29 1/4 | 24 | 34,9<br>1 3/8 | 806,4<br>31 3/4 | 118<br>260 |
| 28" | 711,2<br>28,0 | 927,1<br>36 1/2 | | 52,4<br>2 1/16 | 128,6<br>5 1/16 | 711,2<br>28 | 781,0<br>30 3/4 | 793,7<br>31 1/4 | 28 | 34,9<br>1 3/8 | 863,6<br>34 | 134<br>295 |
| 30" | 762<br>30,0 | 984,2<br>38 3/4 | | 54,0<br>2 1/8 | 130,2<br>5 1/8 | 762,0<br>30 | 831,8<br>32 3/4 | 857,2<br>33 3/4 | 28 | 34,9<br>1 3/8 | 914,4<br>36 | 153<br>338 |
| 32" | 812,8<br>32,0 | 1.060,4<br>41 3/4 | | 57,1<br>2 1/4 | 133,3<br>5 1/4 | 812,8<br>32 | 889,0<br>35 | 908,0<br>35 3/4 | 28 | 41,3<br>1 5/8 | 977,9<br>38 1/2 | 190<br>420 |
| 34" | 863,6<br>34,0 | 1.111,2<br>43 3/4 | | 58,7<br>2 5/16 | 134,9<br>5 5/16 | 863,6<br>34 | 939,8<br>37 | 958,8<br>37 3/4 | 32 | 41,3<br>1 5/8 | 1.028,7<br>40 1/2 | 212<br>468 |
| 36" | 914,4<br>36,0 | 1.168,4<br>46 | | 60,3<br>2 3/8 | 136,5<br>5 3/8 | 914,4<br>36 | 996,9<br>39 1/4 | 1.022,3<br>40 1/4 | 32 | 41,3<br>1 5/8 | 1.085,8<br>42 3/4 | 242<br>534 |
| 38" | 965,2<br>38,0 | 1.238,2<br>48 3/4 | | 60,3<br>2 3/8 | 136,5<br>5 3/8 | 965,2<br>38 | 1.060,4<br>41 3/4 | 1.073,1<br>42 1/4 | 32 | 41,3<br>1 5/8 | 1.149,3<br>45 1/4 | 284<br>625 |
| 40" | 1.016,0<br>40,0 | 1.289,0<br>50 3/4 | | 63,5<br>2 1/2 | 139,7<br>5 1/2 | 1.016,0<br>40 | 1.111,2<br>43 3/4 | 1.123,9<br>44 1/4 | 36 | 41,3<br>1 5/8 | 1.200,1<br>47 1/4 | 311<br>685 |
| 42" | 1.066,8<br>42,0 | 1.346,2<br>53 | | 66,7<br>2 5/8 | 142,9<br>5 5/8 | 1.066,8<br>42 | 1.168,4<br>46 | 1.193,8<br>47 | 36 | 41,3<br>1 5/8 | 1.257,3<br>49 1/2 | 358<br>788 |
| 44" | 1.117,6<br>44,0 | 1.403,3<br>55 1/4 | | 66,7<br>2 5/8 | 142,9<br>5 5/8 | 1.117,6<br>44 | 1.219,2<br>48 | 1.244,6<br>49 | 40 | 41,3<br>1 5/8 | 1.314,4<br>51 3/4 | 376<br>830 |
| 46" | 1.168,4<br>46.0 | 1.454,1<br>57 1/4 | | 68,3<br>2 11/16 | 144,5<br>5 11/16 | 1.168,4<br>46 | 1.270,0<br>50 | 1.295,4<br>51 | 40 | 41,3<br>1 5/8 | 1.365,2<br>53 3/4 | 399<br>880 |
| 48" | 1.219,2<br>48,0 | 1.511,1<br>59 1/2 | | 69,8<br>2 3/4 | 146,0<br>5 3/4 | 1.219,2<br>48 | 1.327,1<br>52 1/4 | 1.358,9<br>53 1/2 | 44 | 41,3<br>1 5/8 | 1.422,4<br>56 | 440<br>970 |

NEUMIRA

## BRIDAS WELDING NECK
## WELDING NECK FLANGES
## 300 Lbs.

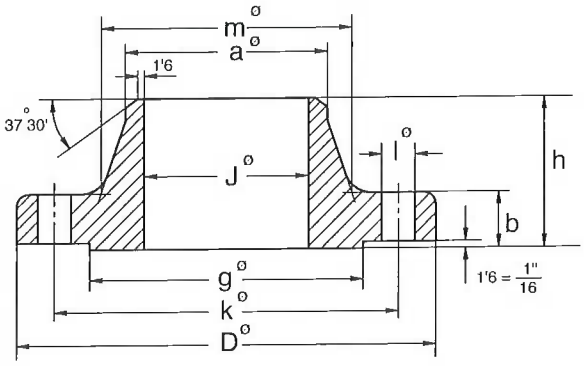


**B.S. 3293 - 1960**

| Tubo Pipe | | Brida Flange | | | | Cuello Hub. | | Resalte Raised face | Taladros Drilling template | | | Peso aprox. Approx. weight kg. Pounds |
|---|---|---|---|---|---|---|---|---|---|---|---|---|
| Diámetro nominal Nominal Pipe size | OD mm inches | D mm inches | J mm inches | b mm inches | h mm inches | a mm inches | m mm inches | g mm inches | Número Number | l mm inches | k mm inches | |
| 26" | 660,4<br>26,0 | 971,5<br>38 1/4 | Debe ser especificado por el comprador<br>To be specified by purchaser | 79,4<br>3 1/8 | 184,1<br>7 1/4 | 666,7<br>26 1/4 | 720,7<br>28 3/8 | 749,3<br>29 1/2 | 28 | 44,4<br>1 3/4 | 876,3<br>34 1/2 | 279<br>615 |
| 28" | 711,2<br>28,0 | 1.035,0<br>40 3/4 | | 85,7<br>3 3/8 | 196,8<br>7 3/4 | 717,5<br>28 1/4 | 774,7<br>30 1/2 | 800,1<br>31 1/2 | 28 | 44,4<br>1 3/4 | 939,8<br>37 | 340<br>750 |
| 30" | 762<br>30,0 | 1.092,2<br>43 | | 92,1<br>3 5/8 | 209,5<br>8 1/4 | 768,3<br>30 1/4 | 827,1<br>32 9/16 | 857,2<br>33 3/4 | 28 | 47,6<br>1 7/8 | 996,9<br>39 1/4 | 390<br>858 |
| 32" | 812,8<br>32,0 | 1.149,3<br>45 1/4 | | 98,4<br>3 7/8 | 222,2<br>8 3/4 | 819,1<br>32 1/4 | 881,1<br>34 11/16 | 914,4<br>36 | 28 | 50,8<br>2 | 1.054,1<br>41 1/2 | 435<br>960 |
| 34" | 863,6<br>34,0 | 1.206,5<br>47 1/2 | | 101,6<br>4 | 231,8<br>9 1/8 | 871,5<br>34 5/16 | 936,6<br>36 7/8 | 965,2<br>38 | 28 | 50,8<br>2 | 1.104,9<br>43 1/2 | 504<br>1.110 |
| 36" | 914,4<br>36,0 | 1.270,0<br>50 | | 104,8<br>4 1/8 | 241,3<br>9 1/2 | 922,3<br>36 5/16 | 990,6<br>39 | 1.022,3<br>40 1/4 | 32 | 54,0<br>2 1/8 | 1.168,4<br>46 | 560<br>1.233 |

NEUMIRA

## BRIDAS WELDING NECK
## WELDING NECK FLANGES
## 400 Lbs.

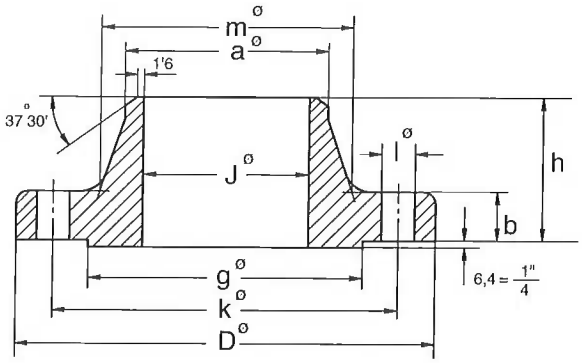


**B.S. 3293 - 1960**

| Tubo Pipe | | Brida Flange | | | | Cuello Hub | | Resalte Raised face | Taladros Drilling template | | | Peso aprox. Approx. weight kg. Pounds |
|---|---|---|---|---|---|---|---|---|---|---|---|---|
| Diámetro nominal Nominal Pipe size | OD mm inches | D mm inches | J mm inches | b mm inches | h mm inches | a mm inches | m mm inches | g mm inches | Número Number | l mm inches | k mm inches | |
| 26" | 660,4<br>26,0 | 971,5<br>38 1/4 | Debe ser especificado por el comprador<br>To be specified by purchaser | 88,9<br>3 1/2 | 193,7<br>7 5/8 | 668,3<br>26 5/16 | 727,1<br>28 5/8 | 749,3<br>29 1/2 | 28 | 47,6<br>1 7/8 | 876,3<br>34 1/2 | 340<br>750 |
| 28" | 711,2<br>28,0 | 1.035,0<br>40 3/4 | | 95,2<br>3 3/4 | 206,4<br>8 1/8 | 719,1<br>28 5/16 | 782,6<br>30 13/16 | 800,1<br>31 1/2 | 28 | 50,8<br>2 | 939,8<br>37 | 399<br>880 |
| 30" | 762<br>30,0 | 1.092,2<br>43 | | 101,6<br>4 | 219,1<br>8 5/8 | 769,9<br>30 5/16 | 836,6<br>32 15/16 | 857,2<br>33 3/4 | 28 | 54,0<br>2 1/8 | 996,9<br>39 1/4 | 454<br>1.000 |
| 32" | 812,8<br>32,0 | 1.149,3<br>45 1/4 | | 107,9<br>4 1/4 | 231,8<br>9 1/8 | 822,3<br>32 3/8 | 889,0<br>35 | 914,4<br>36 | 28 | 54,0<br>2 1/8 | 1.054,1<br>41 1/2 | 522<br>1.150 |
| 34" | 863,6<br>34,0 | 1.206,5<br>47 1/2 | | 111,1<br>4 3/8 | 241,3<br>9 1/2 | 873,1<br>34 3/8 | 944,6<br>37 3/16 | 965,2<br>38 | 28 | 54,0<br>2 1/8 | 1.104,9<br>43 1/2 | 590<br>1.300 |
| 36" | 914,4<br>36,0 | 1.270,0<br>50 | | 114,3<br>4 1/2 | 250,8<br>9 7/8 | 925,5<br>36 7/16 | 1.000,1<br>39 3/8 | 1.022,3<br>40 1/4 | 32 | 54,0<br>2 1/8 | 1.168,4<br>46 | 669<br>1.475 |

NEUMIRA

## BRIDAS WELDING NECK
## WELDING NECK FLANGES
## 600 Lbs.

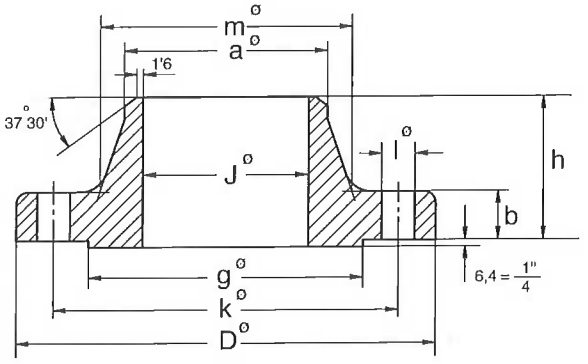


**B.S. 3293 - 1960**

| Tubo Pipe | | Brida Flange | | | | Cuello Hub | | Resalte Raised face | Taladros Drilling template | | | Peso aprox. Approx. weight kg. Pounds |
|---|---|---|---|---|---|---|---|---|---|---|---|---|
| Diámetro nominal Nominal Pipe size | **OD** mm inches | **D** mm inches | **J** mm inches | **b** mm inches | **h** mm inches | **a** mm inches | **m** mm inches | **g** mm inches | Número Number | **l** mm inches | **k** mm inches | |
| 26" | 660,4<br>26,0 | 1.016,0<br>40 | Debe ser especificado por el comprador<br>To be specified by purchaser | 107,9<br>4 1/4 | 222,2<br>8 3/4 | 671,5<br>26 7/16 | 747,7<br>29 7/16 | 749,3<br>29 1/2 | 28 | 50,8<br>2 | 914,4<br>36 | 437<br>963 |
| 28" | 711,2<br>28,0 | 1.073,1<br>42 1/4 | | 111,1<br>4 3/8 | 234,9<br>9 1/4 | 723,9<br>28 1/2 | 803,3<br>31 5/8 | 800,1<br>31 1/2 | 28 | 54,0<br>2 1/8 | 965,2<br>38 | 508<br>1.120 |
| 30" | 762<br>30,0 | 1.130,3<br>44 1/2 | | 114,3<br>4 1/2 | 247,6<br>9 3/4 | 774,7<br>30 1/2 | 862,0<br>33 15/16 | 857,2<br>33 3/4 | 28 | 54,0<br>2 1/8 | 1.022,3<br>40 1/4 | 559<br>1.232 |
| 32" | 812,8<br>32,0 | 1.193,8<br>47 | | 117,5<br>4 5/8 | 260,3<br>10 1/4 | 825,5<br>32 1/2 | 917,6<br>36 1/8 | 914,4<br>36 | 28 | 60,3<br>2 3/8 | 1.079,5<br>42 1/2 | 680<br>1.500 |
| 34" | 863,6<br>34,0 | 1.244,6<br>49 | | 120,6<br>4 3/4 | 269,9<br>10 5/8 | 877,9<br>34 9/16 | 973,1<br>38 5/16 | 965,2<br>38 | 28 | 60,3<br>2 3/8 | 1.130,3<br>44 1/2 | 717<br>1.580 |
| 36" | 914,4<br>36,0 | 1.314,4<br>51 3/4 | | 123,8<br>4 7/8 | 282,6<br>11 1/8 | 928,7<br>36 9/16 | 1.031,9<br>40 5/8 | 1.022,3<br>40 1/4 | 28 | 66,7<br>2 5/8 | 1.193,8<br>47 | 780<br>1.719 |

NEUMIRA

## BRIDAS WELDING NECK, TIPO RING JOINT

## WELDING NECK FLANGES RING JOINT TYPE 300 Lbs.

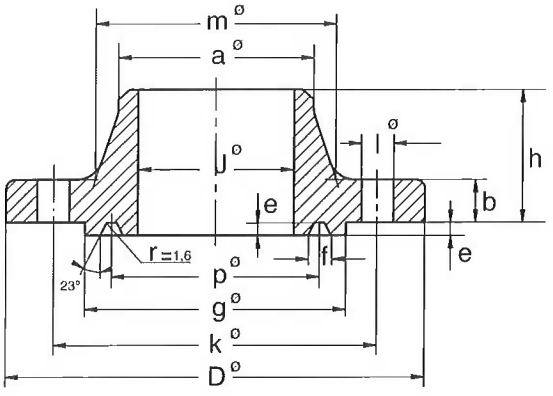


**B.S. 3293 - 1960**

| Tubo Pipe | | Brida Flange | | | | Cuello Hub. | | Resalte Raised face | Taladros Drilling template | | | Junta de anillo Ring Joint | | | Peso aprox. Approx. weight kg. Pounds |
|---|---|---|---|---|---|---|---|---|---|---|---|---|---|---|---|
| Diám. nominal Nominal Pipe size | OD mm inches | D mm inches | J mm inches | b mm inches | h mm inches | a mm inches | m mm inches | g mm inches | Número Number | l mm inches | k mm inches | p mm inches | e mm inches | f mm inches | |
| 26" | 660,4<br>26,0 | 971,5<br>38 1/4 | Debe ser especificado por el comprador<br>To be specified by purchaser | 79,4<br>3 1/8 | 184,1<br>7 1/4 | 666,7<br>26 1/4 | 720,7<br>28 3/8 | 809,6<br>31 7/8 | 28 | 44,4<br>1 3/4 | 876,3<br>34 1/2 | 749,3<br>29 1/2 | 12,7<br>1/2 | 19,8<br>25/32 | 298<br>657 |
| 28" | 711,2<br>28,0 | 1.035,0<br>40 3/4 | | 85,7<br>3 3/8 | 196,8<br>7 3/4 | 717,5<br>28 1/4 | 774,7<br>30 1/2 | 860,4<br>33 7/8 | 28 | 44,4<br>1 3/4 | 939,8<br>37 | 800,1<br>31 1/2 | 12,7<br>1/2 | 19,8<br>25/32 | 360<br>794 |
| 30" | 762<br>30,0 | 1.092,2<br>43 | | 92,1<br>3 5/8 | 209,5<br>8 1/4 | 768,3<br>30 1/4 | 827,1<br>32 9/16 | 917,6<br>36 1/8 | 28 | 47,6<br>1 7/8 | 996,9<br>39 1/4 | 857,2<br>33 3/4 | 12,7<br>1/2 | 19,8<br>25/32 | 412<br>908 |
| 32" | 812,8<br>32,0 | 1.149,3<br>45 1/4 | | 98,4<br>3 7/8 | 222,2<br>8 3/4 | 819,1<br>32 1/4 | 881,1<br>34 11/16 | 984,2<br>38 3/4 | 28 | 50,8<br>2 | 1.054,1<br>41 1/2 | 914,4<br>36 | 14,3<br>9/16 | 23,0<br>29/32 | 465<br>1.025 |
| 34" | 863,6<br>34,0 | 1.206,5<br>47 1/2 | | 101,6<br>4 | 231,8<br>9 1/8 | 871,5<br>34 5/16 | 936,6<br>36 7/8 | 1.035,0<br>40 3/4 | 28 | 50,8<br>2 | 1.104,9<br>43 1/2 | 965,2<br>38 | 14,3<br>9/16 | 23,0<br>29/32 | 536<br>1.182 |
| 36" | 914,4<br>36,0 | 1.270,0<br>50 | | 104,8<br>4 1/8 | 241,3<br>9 1/2 | 922,3<br>36 5/16 | 990,6<br>39 | 1.092,2<br>43 | 32 | 54,0<br>2 1/8 | 1.168,4<br>46 | 1.022,3<br>40 1/4 | 14,3<br>9/16 | 23,0<br>29/32 | 595<br>1.312 |

NEUMIRA

## BRIDAS WELDING NECK
## TIPO RING JOINT

## WELDING NECK FLANGES
## RING JOINT TYPE
## 400 Lbs.

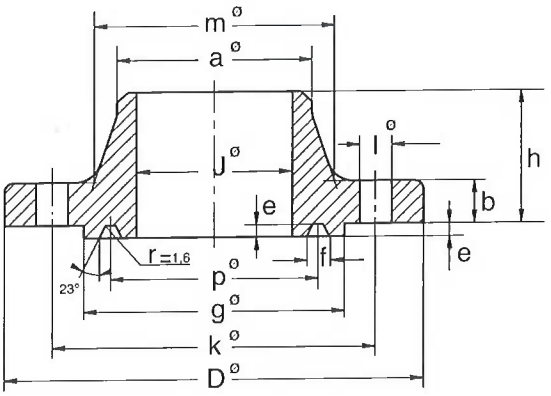


**B.S. 3293 - 1960**

| Tubo Pipe | | Brida Flange | | | | Cuello Hub | | Resalte Raised face | Taladros Drilling template | | | Junta de anillo Ring Joint | | | Peso aprox. Approx. weight kg. Pounds |
|---|---|---|---|---|---|---|---|---|---|---|---|---|---|---|---|
| Diám. nominal Nominal Pipe size | **OD** mm inches | **D** mm inches | **J** mm inches | **b** mm inches | **h** mm inches | **a** mm inches | **m** mm inches | **g** mm inches | Número Number | **l** mm inches | **k** mm inches | **p** mm inches | **e** mm inches | **f** mm inches | |
| 26" | 660,4<br>26,0 | 971,5<br>38 1/4 | Debe ser especificado por el comprador<br>To be specified by purchaser | 88,9<br>3 1/2 | 193,7<br>7 5/8 | 668,3<br>26 5/16 | 727,1<br>28 5/8 | 809,6<br>31 7/8 | 28 | 47,6<br>1 7/8 | 876,3<br>34 1/2 | 749,3<br>29 1/2 | 12,7<br>1/2 | 19,8<br>25/32 | 349<br>769 |
| 28" | 711,2<br>28,0 | 1.035,0<br>40 3/4 | | 95,2<br>3 3/4 | 206,4<br>8 1/8 | 719,1<br>28 5/16 | 782,6<br>30 13/16 | 860,4<br>33 7/8 | 28 | 50,8<br>2 | 939,8<br>37 | 800,1<br>31 1/2 | 12,7<br>1/2 | 19,8<br>25/32 | 409<br>902 |
| 30" | 762<br>30,0 | 1.092,2<br>43 | | 101,6<br>4 | 219,1<br>8 5/8 | 769,9<br>30 5/16 | 836,6<br>32 15/16 | 917,6<br>36 1/8 | 28 | 54,0<br>2 1/8 | 996,9<br>39 1/4 | 857,2<br>33 3/4 | 12,7<br>1/2 | 19,8<br>25/32 | 465<br>1.025 |
| 32" | 812,8<br>32,0 | 1.149,3<br>45 1/4 | | 107,9<br>4 1/4 | 231,8<br>9 1/8 | 822,3<br>32 3/8 | 889,0<br>35 | 984,2<br>38 3/4 | 28 | 54,0<br>2 1/8 | 1.054,1<br>41 1/2 | 914,4<br>36 | 14,3<br>9/16 | 23,0<br>29/32 | 539<br>1.188 |
| 34" | 863,6<br>34,0 | 1.206,5<br>47 1/2 | | 111,1<br>4 3/8 | 241,3<br>9 1/2 | 873,1<br>34 3/8 | 944,6<br>37 3/16 | 1.035,0<br>40 3/4 | 28 | 54,0<br>2 1/8 | 1.104,9<br>43 1/2 | 965,2<br>38 | 14,3<br>9/16 | 23,0<br>29/32 | 608<br>1.340 |
| 36" | 914,4<br>36,0 | 1.270,0<br>50 | | 114,3<br>4 1/2 | 250,8<br>9 7/8 | 925,5<br>36 7/16 | 1.000,1<br>39 3/8 | 1.092,2<br>43 | 32 | 54,0<br>2 1/8 | 1.168,4<br>46 | 1.022,3<br>40 1/4 | 14,3<br>9/16 | 23,0<br>29/32 | 689<br>1.520 |

NEUMIRA

## BRIDAS WELDING NECK, TIPO RING JOINT

## WELDING NECK FLANGES RING JOINT TYPE 600 Lbs.

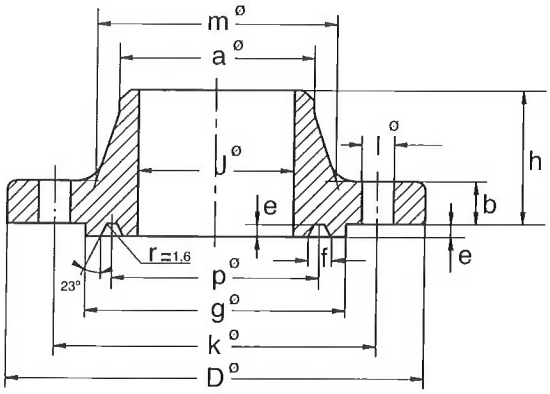


**B.S. 3293 - 1960**

| Tubo Pipe | | Brida Flange | | | | Cuello Hub. | | Resalte Raised face | Taladros Drilling template | | | Junta de anillo Ring Joint | | | Peso aprox. Approx. weight kg. Pounds |
|---|---|---|---|---|---|---|---|---|---|---|---|---|---|---|---|
| Diám. nominal Nominal Pipe size | OD mm inches | D mm inches | J mm inches | b mm inches | h mm inches | a mm inches | m mm inches | g mm inches | Número Number | l mm inches | k mm inches | p mm inches | e mm inches | f mm inches | |
| 26" | 660,4<br>26,0 | 1.016,0<br>40 | Debe ser especificado por el comprador<br>To be specified by purchaser | 107,9<br>4 1/4 | 222,2<br>8 3/4 | 671,5<br>26 7/16 | 747,7<br>29 7/16 | 809,6<br>31 7/8 | 28 | 50,8<br>2 | 914,4<br>36 | 749,3<br>29 1/2 | 12,7<br>1/2 | 19,8<br>25/32 | 446<br>983 |
| 28" | 711,2<br>28,0 | 1.073,1<br>42 1/4 | | 111,1<br>4 3/8 | 234,9<br>9 1/4 | 723,9<br>28 1/2 | 803,3<br>31 5/8 | 860,4<br>33 7/8 | 28 | 54,0<br>2 1/8 | 965,2<br>38 | 800,1<br>31 1/2 | 12,7<br>1/2 | 19,8<br>25/32 | 518<br>1.142 |
| 30" | 762,0<br>30,0 | 1.130,3<br>44 1/2 | | 114,3<br>4 1/2 | 247,6<br>9 3/4 | 774,7<br>30 1/2 | 862,0<br>33 15/16 | 917,6<br>36 1/8 | 28 | 54,0<br>2 1/8 | 1.022,3<br>40 1/4 | 857,2<br>33 3/4 | 12,7<br>1/2 | 19,8<br>25/32 | 570<br>1.257 |
| 32" | 812,8<br>32,0 | 1.193,8<br>47 | | 117,5<br>4 5/8 | 260,3<br>10 1/4 | 825,5<br>32 1/2 | 917,6<br>36 1/8 | 984,2<br>38 3/4 | 28 | 60,3<br>2 3/8 | 1.079,5<br>42 1/2 | 914,4<br>36 | 14,3<br>9/16 | 23,0<br>29/32 | 697<br>1.537 |
| 34" | 863,6<br>34,0 | 1.244,6<br>49 | | 120,6<br>4 3/4 | 269,9<br>10 5/8 | 877,9<br>34 9/16 | 973,1<br>38 5/16 | 1.035,0<br>40 3/4 | 28 | 60,3<br>2 3/8 | 1.130,3<br>44 1/2 | 965,2<br>38 | 14,3<br>9/16 | 23,0<br>29/32 | 735<br>1.620 |
| 36" | 914,4<br>36,0 | 1.314,4<br>51 3/4 | | 123,8<br>4 7/8 | 282,6<br>11 1/8 | 928,7<br>36 9/16 | 1.031,9<br>40 5/8 | 1.092,2<br>43 | 28 | 66,7<br>2 5/8 | 1.193,8<br>47 | 1.022,3<br>40 1/4 | 14,3<br>9/16 | 23,0<br>29/32 | 800<br>1.764 |

NEUMIRA

## BRIDAS SLIP-ON
## TIPO RING JOINT

## SLIP-ON FLANGES
## RING JOINT TYPE
## 150 Lbs.

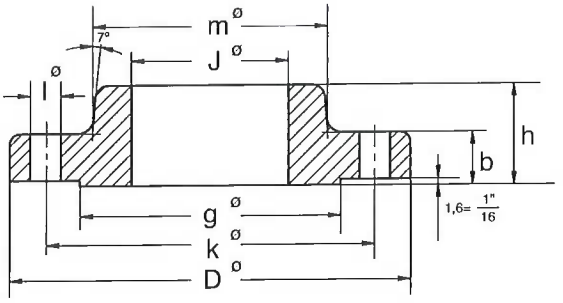


**B.S. 3293 - 1960**

| Tubo Pipe | | Brida Flange | | | | Cuello Hub | Resalte Raised face | Taladros Drilling template | | | Peso aprox. Approx. weight kg. Pounds |
|---|---|---|---|---|---|---|---|---|---|---|---|
| Diámetro nominal Nominal Pipe size | OD mm inches | D mm inches | J mm inches | b mm inches | h mm inches | m mm inches | g mm inches | Número Number | l mm inches | k mm inches | |
| 26" | 660,4<br>26,0 | 869,9<br>34 1/4 | 666,7<br>26 1/4 | 50,8<br>2 | 85,7<br>3 3/8 | 723,9<br>28 1/2 | 742,9<br>29 1/4 | 24 | 34,9<br>1 3/8 | 806,4<br>31 3/4 | 107<br>236 |
| 28" | 711,2<br>28,0 | 927,1<br>36 1/2 | 717,6<br>28 1/4 | 52,4<br>2 11/16 | 87,3<br>3 7/16 | 781,0<br>30 3/4 | 793,7<br>31 1/4 | 28 | 34,9<br>1 3/8 | 863,6<br>34 | 122<br>270 |
| 30" | 762<br>30,0 | 984,2<br>38 3/4 | 768,3<br>30 1/4 | 54,0<br>2 1/8 | 88,9<br>3 1/2 | 831,8<br>32 3/4 | 857,2<br>33 3/4 | 28 | 34,9<br>1 3/8 | 914,4<br>36 | 138<br>304 |
| 32" | 812,8<br>32,0 | 1.060,4<br>41 3/4 | 819,1<br>32 1/4 | 57,1<br>2 1/4 | 92,1<br>3 5/8 | 889,0<br>35 | 908,0<br>35 3/4 | 28 | 41,3<br>1 5/8 | 977,9<br>38 1/2 | 170<br>375 |
| 34" | 863,6<br>34,0 | 1.111,2<br>43 3/4 | 869,9<br>34 1/4 | 58,7<br>2 5/16 | 93,7<br>3 11/16 | 939,8<br>37 | 958,8<br>37 3/4 | 32 | 41,3<br>1 5/8 | 1.028,7<br>40 1/2 | 184<br>405 |
| 36" | 914,4<br>36,0 | 1.168,4<br>46 | 920,7<br>36 1/4 | 60,3<br>2 3/8 | 95,2<br>3 3/4 | 996,9<br>39 1/4 | 1.022,3<br>40 1/4 | 32 | 41,3<br>1 5/8 | 1.085,8<br>42 3/4 | 211<br>464 |
| 38" | 965,2<br>38,0 | 1.238,2<br>48 3/4 | 971,5<br>38 1/4 | 60,3<br>2 3/8 | 95,2<br>3 3/4 | 1.060,4<br>41 3/4 | 1.073,1<br>42 1/4 | 32 | 41,3<br>1 5/8 | 1.149,3<br>45 1/4 | 249<br>550 |
| 40" | 1.016,0<br>40,0 | 1.289,0<br>50 3/4 | 1.022,3<br>40 1/4 | 63,5<br>2 1/2 | 98,4<br>3 7/8 | 1.111,2<br>43 3/4 | 1.123,9<br>44 1/4 | 36 | 41,3<br>1 5/8 | 1.200,1<br>47 1/4 | 272<br>600 |
| 42" | 1.066,8<br>42,0 | 1.346,2<br>53 | 1.073,1<br>42 1/4 | 66,7<br>2 5/8 | 101,6<br>4 | 1.168,4<br>46 | 1.193,8<br>47 | 36 | 41,3<br>1 5/8 | 1.257,3<br>49 1/2 | 313<br>690 |
| 44" | 1.117,6<br>44,0 | 1.403,3<br>55 1/4 | 1.123,9<br>44 1/4 | 66,7<br>2 5/8 | 101,6<br>4 | 1.219,2<br>48 | 1.244,6<br>49 | 40 | 41,3<br>1 5/8 | 1.314,4<br>51 3/4 | 331<br>730 |
| 46" | 1.168,4<br>46,0 | 1.454,1<br>57 1/4 | 1.174,7<br>46 1/4 | 68,3<br>2 11/16 | 103,2<br>4 1/16 | 1.270,0<br>50 | 1.295,4<br>51 | 40 | 41,3<br>1 5/8 | 1.365,2<br>53 3/4 | 349<br>770 |
| 48" | 1.219,2<br>48,0 | 1.511,1<br>59 1/2 | 1.225,5<br>48 1/4 | 69,8<br>2 3/4 | 104,8<br>4 1/8 | 1.327,1<br>52 1/4 | 1.358,9<br>53 1/4 | 44 | 41,3<br>1 5/8 | 1.422,4<br>56 | 381<br>840 |

NEUMIRA

## BRIDAS SLIP-ON
## SLIP-ON FLANGES
## 300 Lbs.

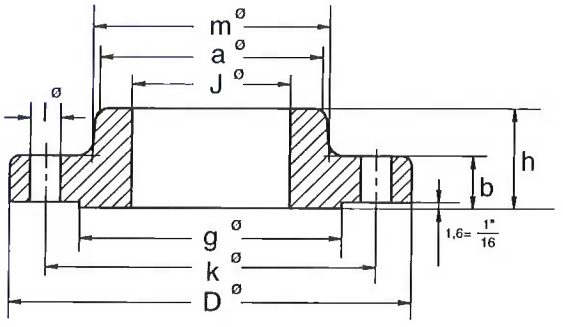


**B.S. 3293 - 1960**

| Tubo Pipe | | Brida Flange | | | | Cuello Hub. | | Resalte Raised face | Taladros Drilling template | | | Peso aprox. Approx. weight kg. Pounds |
|---|---|---|---|---|---|---|---|---|---|---|---|---|
| Diámetro nominal Nominal Pipe size | **OD** mm inches | **D** mm inches | **J** mm inches | **b** mm inches | **h** mm inches | **a** mm inches | **m** mm inches | **g** mm inches | Número Number | **l** mm inches | **k** mm inches | |
| 26" | 660,4<br>26,0 | 971,5<br>38 1/4 | 666,7<br>26 1/4 | 79,4<br>3 1/8 | 184,1<br>7 1/4 | 687,4<br>27 1/16 | 720,7<br>28 3/8 | 749,3<br>29 1/2 | 28 | 44,4<br>1 3/4 | 876,3<br>34 1/2 | 251<br>552 |
| 28" | 711,2<br>28,0 | 1.035,0<br>40 3/4 | 717,6<br>28 1/4 | 85,7<br>3 3/8 | 196,8<br>7 3/4 | 739,8<br>29 1/8 | 774,7<br>30 1/2 | 800,1<br>31 1/2 | 28 | 44,4<br>1 3/4 | 939,8<br>37 | 313<br>690 |
| 30" | 762<br>30,0 | 1.092,2<br>43 | 768,3<br>30 1/4 | 92,1<br>3 5/8 | 209,5<br>8 1/4 | 792,2<br>31 3/16 | 827,1<br>32 9/16 | 857,2<br>33 3/4 | 28 | 47,6<br>1 7/8 | 996,9<br>39 1/4 | 354<br>779 |
| 32" | 812,8<br>32,0 | 1.149,3<br>45 1/4 | 819,1<br>32 1/4 | 98,4<br>3 7/8 | 222,2<br>8 3/4 | 844,5<br>33 1/4 | 881,1<br>34 11/16 | 914,4<br>36 | 28 | 50,8<br>2 | 1.054,1<br>41 1/2 | 395<br>870 |
| 34" | 863,6<br>34,0 | 1.206,5<br>47 1/2 | 869,9<br>34 1/4 | 101,6<br>4 | 231,8<br>9 1/8 | 896,9<br>35 5/16 | 936,6<br>36 7/8 | 965,2<br>38 | 28 | 50,8<br>2 | 1.104,9<br>43 1/2 | 460<br>1.014 |
| 36" | 914,4<br>36,0 | 1.270,0<br>50 | 920,7<br>36 1/4 | 104,8<br>4 1/8 | 241,3<br>9 1/2 | 949,3<br>37 3/8 | 990,6<br>39 | 1.022,3<br>40 1/4 | 32 | 54,0<br>2 1/8 | 1.168,4<br>46 | 513<br>1.130 |

NEUMIRA

## BRIDAS SLIP-ON
## SLIP-ON FLANGES
## 400 Lbs.

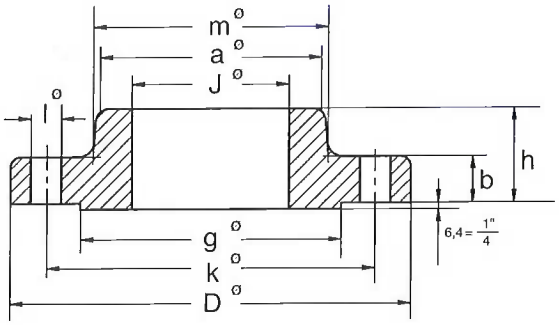


**B.S. 3293 - 1960**

| Tubo Pipe | | Brida Flange | | | | Cuello Hub. | | Resalte Raised face | Taladros Drilling template | | | Peso aprox. Approx. weight kg. Pounds |
|---|---|---|---|---|---|---|---|---|---|---|---|---|
| Diámetro nominal Nominal Pipe size | OD mm inches | D mm inches | J mm inches | b mm inches | h mm inches | a mm inches | m mm inches | g mm inches | Número Number | l mm inches | k mm inches | |
| 26" | 660,4<br>26,0 | 971,5<br>38 1/4 | 666,7<br>26 1/4 | 88,9<br>3 1/2 | 193,7<br>7 5/8 | 693,7<br>27 5/16 | 727,1<br>28 5/8 | 749,3<br>29 1/2 | 28 | 47,6<br>1 7/8 | 876,3<br>34 1/2 | 295<br>650 |
| 28" | 711,2<br>28,0 | 1.035,0<br>40 3/4 | 717,6<br>28 1/4 | 95,2<br>3 3/4 | 206,4<br>8 1/8 | 746,1<br>29 3/8 | 782,6<br>30 13/16 | 800,1<br>31 1/2 | 28 | 50,8<br>2 | 939,8<br>37 | 354<br>780 |
| 30" | 762<br>30,0 | 1.092,2<br>43 | 768,3<br>30 1/4 | 101,6<br>4 | 219,1<br>8 5/8 | 800,1<br>31 1/2 | 836,6<br>32 15/16 | 857,2<br>33 3/4 | 28 | 54,0<br>2 1/8 | 996,9<br>39 1/4 | 408<br>900 |
| 32" | 812,8<br>32,0 | 1.149,3<br>45 1/4 | 819,1<br>32 1/4 | 107,9<br>4 1/4 | 231,8<br>9 1/8 | 852,5<br>33 9/16 | 889,0<br>35 | 914,4<br>36 | 28 | 54,0<br>2 1/8 | 1.054,1<br>41 1/2 | 465<br>1.025 |
| 34" | 863,6<br>34,0 | 1.206,5<br>47 1/2 | 869,9<br>34 1/4 | 111,1<br>4 3/8 | 241,3<br>9 1/2 | 904,9<br>35 5/8 | 944,6<br>37 3/16 | 965,2<br>38 | 28 | 54,0<br>2 1/8 | 1.104,9<br>43 1/2 | 522<br>1.150 |
| 36" | 914,4<br>36,0 | 1.270,0<br>50 | 920,7<br>36 1/4 | 114,3<br>4 1/2 | 250,8<br>9 7/8 | 958,8<br>37 3/4 | 1.000,1<br>39 3/8 | 1.022,3<br>40 1/4 | 32 | 54,0<br>2 1/8 | 1.168,4<br>46 | 601<br>1.325 |

NEUMIRA

## BRIDAS SLIP-ON
## SLIP-ON FLANGES
## 600 Lbs.

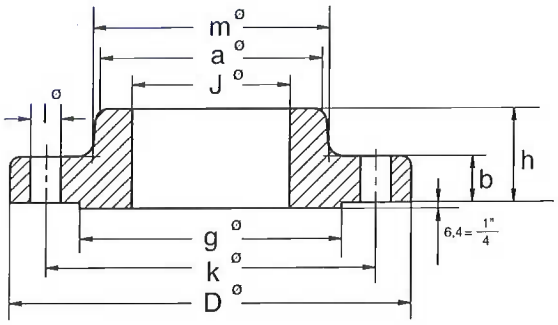


**B.S. 3293 - 1960**

| Tubo Pipe | | Brida Flange | | | | Cuello Hub. | | Resalte Raised face | Taladros Drilling template | | | Peso aprox. Approx. weight kg. Pounds |
|---|---|---|---|---|---|---|---|---|---|---|---|---|
| Diámetro nominal Nominal Pipe size | OD mm inches | D mm inches | J mm inches | b mm inches | h mm inches | a mm inches | m mm inches | g mm inches | Número Number | l mm inches | k mm inches | |
| 26" | 660,4<br>26,0 | 1.016,0<br>40 | 666,7<br>26 1/4 | 107,9<br>4 1/4 | 222,2<br>8 3/4 | 706,4<br>27 13/16 | 747,7<br>29 7/16 | 749,3<br>29 1/2 | 28 | 50,8<br>2 | 914,4<br>36 | 408<br>898 |
| 28" | 711,2<br>28,0 | 1.073,1<br>42 1/4 | 717,6<br>28 1/4 | 111,1<br>4 3/8 | 234,9<br>9 1/4 | 760,4<br>29 15/16 | 803,3<br>31 5/8 | 800,1<br>31 1/2 | 28 | 54,0<br>2 1/8 | 965,2<br>38 | 472<br>1.040 |
| 30" | 762<br>30,0 | 1.130,3<br>44 1/2 | 768,3<br>30 1/4 | 114,3<br>4 1/2 | 247,6<br>9 3/4 | 814,4<br>32 1/16 | 862,0<br>33 15/16 | 857,2<br>33 3/4 | 28 | 54,0<br>2 1/8 | 1.022,3<br>40 1/4 | 526<br>1.158 |
| 32" | 812,8<br>32,0 | 1.193,8<br>47 | 819,1<br>32 1/4 | 117,5<br>4 5/8 | 260,3<br>10 1/4 | 868,4<br>34 3/16 | 917,6<br>36 1/8 | 914,4<br>36 | 28 | 60,3<br>2 3/8 | 1.079,5<br>42 1/2 | 605<br>1.335 |
| 34" | 863,6<br>34,0 | 1.244,6<br>49 | 869,9<br>34 1/4 | 120,6<br>4 3/4 | 269,9<br>10 5/8 | 922,3<br>36 5/16 | 973,1<br>38 5/16 | 965,2<br>38 | 28 | 60,3<br>2 3/8 | 1.130,3<br>44 1/2 | 652<br>1.436 |
| 36" | 914,4<br>36,0 | 1.314,4<br>51 3/4 | 920,7<br>36 1/4 | 123,8<br>4 7/8 | 282,6<br>11 1/8 | 976,3<br>38 7/16 | 1.031,9<br>40 5/8 | 1.022,3<br>40 1/4 | 28 | 66,7<br>2 5/8 | 1.193,8<br>47 | 744<br>1.638 |

NEUMIRA

## BRIDAS SLIP-ON, TIPO RING JOINT

## SLIP-ON FLANGES RING JOINT TYPE 300 Lbs.

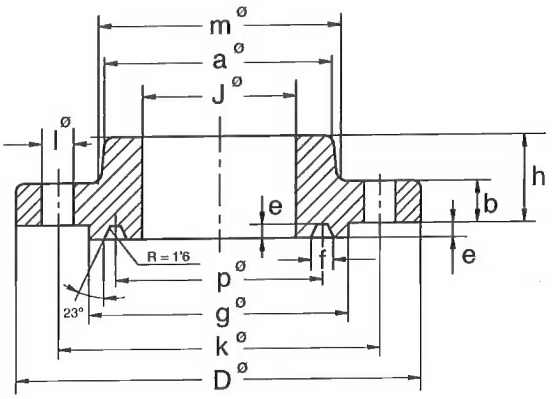


**B.S. 3293 - 1960**

| Tubo Pipe | | Brida Flange | | | | Cuello Hub | | Resalte Raised face | Taladros Drilling template | | | Junta de anillo Ring Joint | | | Peso aprox. Approx. weight kg. Pounds |
|---|---|---|---|---|---|---|---|---|---|---|---|---|---|---|---|
| Diám. nominal Nominal Pipe size | OD mm inches | D mm inches | J mm inches | b mm inches | h mm inches | a mm inches | m mm inches | g mm inches | Número Number | l mm inches | k mm inches | p mm inches | e mm inches | f mm inches | |
| 26" | 660,4<br>26,0 | 971,5<br>38 1/4 | 666,7<br>26 1/4 | 79,4<br>3 1/8 | 184,1<br>7 1/4 | 687,4<br>27 1/16 | 720,7<br>28 3/8 | 809,6<br>31 7/8 | 28 | 44,4<br>1 3/4 | 876,3<br>34 1/2 | 749,3<br>29 1/2 | 12,7<br>1/2 | 19,8<br>25/32 | 270<br>595 |
| 28" | 711,2<br>28,0 | 1.035,0<br>40 3/4 | 717,6<br>28 1/4 | 85,7<br>3 3/8 | 196,8<br>7 3/4 | 739,8<br>29 1/8 | 774,7<br>30 1/2 | 860,4<br>33 7/8 | 28 | 44,4<br>1 3/4 | 939,8<br>37 | 800,1<br>31 1/2 | 12,7<br>1/2 | 19,8<br>25/32 | 333<br>734 |
| 30" | 762,0<br>30,0 | 1.092,2<br>43 | 768,3<br>30 1/4 | 92,1<br>3 5/8 | 209,5<br>8 1/4 | 792,2<br>31 3/16 | 827,1<br>32 9/16 | 917,6<br>36 1/8 | 28 | 47,6<br>1 7/8 | 996,9<br>39 1/4 | 857,2<br>33 3/4 | 12,7<br>1/2 | 19,8<br>25/32 | 376<br>829 |
| 32" | 812,8<br>32,0 | 1.149,3<br>45 1/4 | 819,1<br>32 1/4 | 98,4<br>3 7/8 | 222,2<br>8 3/4 | 844,5<br>33 1/4 | 881,1<br>34 11/16 | 984,2<br>38 3/4 | 28 | 50,8<br>2 | 1.054,1<br>41 1/2 | 914,4<br>36 | 14,3<br>9/16 | 23,0<br>29/32 | 425<br>937 |
| 34" | 863,6<br>34,0 | 1.206,5<br>47 1/2 | 869,9<br>34 1/4 | 101,6<br>4 | 231,8<br>9 1/8 | 896,9<br>35 5/16 | 936,6<br>36 7/8 | 1.035,0<br>40 3/4 | 28 | 50,8<br>2 | 1.104,9<br>43 1/2 | 965,2<br>38 | 14,3<br>9/16 | 23,0<br>29/32 | 492<br>1.085 |
| 36" | 914,4<br>36,0 | 1.270,0<br>50 | 920,7<br>36 1/4 | 104,8<br>4 1/8 | 241,3<br>9 1/2 | 949,3<br>37 3/8 | 990,6<br>39 | 1.092,2<br>43 | 32 | 54,0<br>2 1/8 | 1.168,4<br>46 | 1.022,3<br>40 1/4 | 14,3<br>9/16 | 23,0<br>29/32 | 548<br>1.208 |

NEUMIRA

## BRIDAS SLIP-ON, TIPO RING JOINT

## SLIP-ON FLANGES RING JOINT TYPE 400 Lbs.

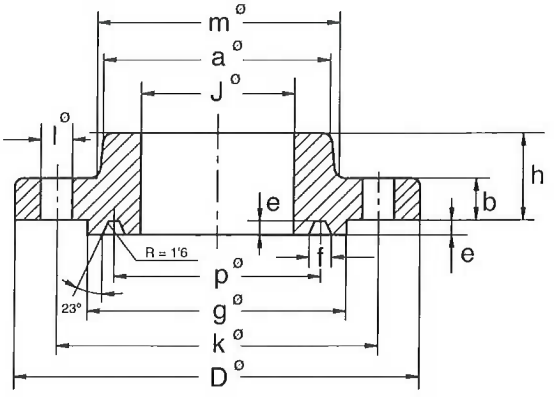


**B.S. 3293 - 1960**

| Tubo Pipe | | Brida Flange | | | | Cuello Hub. | | Resalte Raised face | Taladros Drilling template | | | Junta de anillo Ring Joint | | | Peso aprox. Approx. weight kg. Pounds |
|---|---|---|---|---|---|---|---|---|---|---|---|---|---|---|---|
| Diám. nominal Nominal Pipe size | OD mm inches | D mm inches | J mm inches | b mm inches | h mm inches | a mm inches | m mm inches | g mm inches | Número Number | l mm inches | k mm inches | p mm inches | e mm inches | f mm inches | |
| 26" | 660,4<br>26,0 | 971,5<br>38 1/4 | 666,7<br>26 1/4 | 88,9<br>3 1/2 | 193,7<br>7 5/8 | 693,7<br>27 5/16 | 727,1<br>28 5/8 | 809,6<br>31 7/8 | 28 | 47,6<br>1 7/8 | 876,3<br>34 1/2 | 749,3<br>29 1/2 | 12,7<br>1/2 | 19,8<br>25/32 | 304<br>670 |
| 28" | 711,2<br>28,0 | 1.035,0<br>40 3/4 | 717,6<br>28 1/4 | 95,2<br>3 3/4 | 206,4<br>8 1/8 | 746,1<br>29 3/8 | 782,6<br>30 13/16 | 860,4<br>33 7/8 | 28 | 50,8<br>2 | 939,8<br>37 | 800,1<br>31 1/2 | 12,7<br>1/2 | 19,8<br>25/32 | 364<br>802 |
| 30" | 762<br>30,0 | 1.092,2<br>43 | 768,3<br>30 1/4 | 101,6<br>4 | 219,1<br>8 5/8 | 800,1<br>31 1/2 | 836,6<br>32 15/16 | 917,6<br>36 1/8 | 28 | 54,0<br>2 1/8 | 996,9<br>39 1/4 | 857,2<br>33 3/4 | 12,7<br>1/2 | 19,8<br>25/32 | 419<br>924 |
| 32" | 812,8<br>32,0 | 1.149,3<br>45 1/4 | 819,1<br>32 1/4 | 107,9<br>4 1/4 | 231,8<br>9 1/8 | 852,5<br>33 9/16 | 889,0<br>35 | 984,2<br>38 3/4 | 28 | 54,0<br>2 1/8 | 1.054,1<br>41 1/2 | 914,4<br>36 | 14,3<br>9/16 | 23,0<br>29/32 | 482<br>1.063 |
| 34" | 863,6<br>34,0 | 1.206,5<br>47 1/2 | 869,9<br>34 1/4 | 111,1<br>4 3/8 | 241,3<br>9 1/2 | 904,9<br>35 5/8 | 944,6<br>37 3/16 | 1.035,0<br>40 3/4 | 28 | 54,0<br>2 1/8 | 1.104,9<br>43 1/2 | 965,2<br>38 | 14,3<br>9/16 | 23,0<br>29/32 | 540<br>1.190 |
| 36" | 914,4<br>36,0 | 1.270,0<br>50 | 920,7<br>36 1/4 | 114,3<br>4 1/2 | 250,8<br>9 7/8 | 958,8<br>37 3/4 | 1.000,1<br>39 3/8 | 1.092,2<br>43 | 32 | 54,0<br>2 1/8 | 1.168,4<br>46 | 1.022,3<br>40 1/4 | 14,3<br>9/16 | 23,0<br>29/32 | 621<br>1.369 |

NEUMIRA

## BRIDAS SLIP-ON
## TIPO RING JOINT

## SLIP-ON FLANGES
## RING JOINT TYPE
## 600 Lbs.

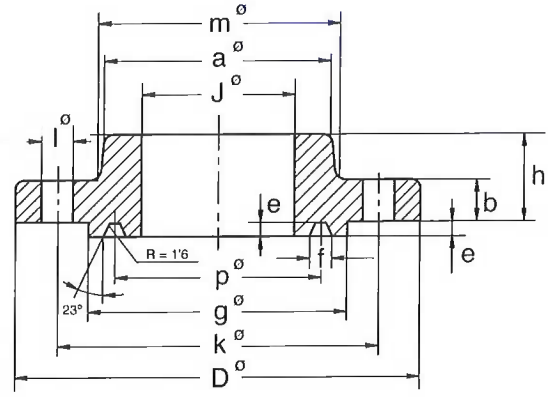


**B.S. 3293 - 1960**

| Tubo Pipe | | Brida Flange | | | | Cuello Hub | | Resalte Raised face | Taladros Drilling template | | | Junta de anillo Ring Joint | | | Peso aprox. Approx. weight kg. Pounds |
|---|---|---|---|---|---|---|---|---|---|---|---|---|---|---|---|
| Diám. nominal Nominal Pipe size | **OD** mm inches | **D** mm inches | **J** mm inches | **b** mm inches | **h** mm inches | **a** mm inches | **m** mm inches | **g** mm inches | Número Number | **l** mm inches | **k** mm inches | **p** mm inches | **e** mm inches | **f** mm inches | |
| 26" | 660,4<br>26,0 | 1.016,0<br>40 | 666,7<br>26 1/4 | 107,9<br>4 1/4 | 222,2<br>8 3/4 | 706,4<br>27 13/16 | 747,7<br>29 7/16 | 809,6<br>31 7/8 | 28 | 50,8<br>2 | 914,4<br>36 | 749,3<br>29 1/2 | 12,7<br>1/2 | 19,8<br>25/32 | 417<br>919 |
| 28" | 711,2<br>28,0 | 1.073,1<br>42 1/4 | 717,6<br>28 1/4 | 111,1<br>4 3/8 | 234,9<br>9 1/4 | 760,4<br>29 15/16 | 803,3<br>31 5/8 | 860,4<br>33 7/8 | 28 | 54,0<br>2 1/8 | 965,2<br>38 | 800,1<br>31 1/2 | 12,7<br>1/2 | 19,8<br>25/32 | 482<br>1.063 |
| 30" | 762,0<br>30,0 | 1.130,3<br>44 1/2 | 768,3<br>30 1/4 | 114,3<br>4 1/2 | 247,6<br>9 3/4 | 814,4<br>32 1/16 | 862,0<br>33 15/16 | 917,6<br>36 1/8 | 28 | 54,0<br>2 1/8 | 1.022,3<br>40 1/4 | 857,2<br>33 3/4 | 12,7<br>1/2 | 19,8<br>25/32 | 537<br>1.184 |
| 32" | 812,8<br>32,0 | 1.193,8<br>47 | 819,1<br>32 1/4 | 117,5<br>4 5/8 | 260,3<br>10 1/4 | 868,4<br>34 3/16 | 917,6<br>36 1/8 | 984,2<br>38 3/4 | 28 | 60,3<br>2 3/8 | 1.079,5<br>42 1/2 | 914,4<br>36 | 14,3<br>9/16 | 23,0<br>29/32 | 622<br>1.371 |
| 34" | 863,6<br>34,0 | 1.244,6<br>49 | 869,9<br>34 1/4 | 120,6<br>4 3/4 | 269,9<br>10 5/8 | 922,3<br>36 5/16 | 973,1<br>38 5/16 | 1.035,0<br>40 3/4 | 28 | 60,3<br>2 3/8 | 1.130,3<br>44 1/2 | 965,2<br>38 | 14,3<br>9/16 | 23,0<br>29/32 | 670<br>1.477 |
| 36" | 914,4<br>36,0 | 1.314,4<br>50 3/4 | 920,7<br>36 1/4 | 123,8<br>4 7/8 | 282,6<br>11 1/8 | 976,3<br>38 7/16 | 1.031,9<br>40 5/8 | 1.092,2<br>43 | 28 | 66,7<br>2 5/8 | 1.193,8<br>47 | 1.022,3<br>40 1/4 | 14,3<br>9/16 | 23,0<br>29/32 | 764<br>1.684 |

B.S. 1501 - PART 3 - 1990

Table 1. Chemical composition (cast analysis), mechanical properties at ambient temperature and heat treatment.

| Steel type | | Chemical composition | | | | | | | | | | | | | Mechanical properties | | | | | Heat treatment | Intergranular corrosion test |
|---|---|---|---|---|---|---|---|---|---|---|---|---|---|---|---|---|---|---|---|---|---|
| Steel number | Description | C | | Si | Mn | P | S | Cr | | Mo | | Ni | | Others | Proof stress value $R_{p0.2}$ | Proof stress value $R_{p1.0}$ | Tensile strength $R_m$ | | Elongation A (see note 1) | Solution anneal temperature (see notes 2, 3 and 4) | Treatment time at 650ºC to 700 ºC (see note 5) |
| | | min. | max. | max. | max. | max. | max. | min. | max. | min. | max. | min. | max. | | min. | min. | min. | max. | min. | | |
| | | % | % | % | % | % | % | % | % | % | % | % | % | % | N/mm² | N/mm² | N/mm² | N/mm² | % | ºC | min |
| 304S11 | CrNi 18/10 0.03C | - | 0.030 | 1.00 | 2.00 | 0.045 | 0.025 | 17.00 | 19.00 | - | - | 9.00 | 12.00 | - | 180 | 215 | 480 | 680 | 40 | 1000 to 1100 | 30 |
| 304S31 | CrNi 18/9 0.07C | - | 0.07 | 1.00 | 2.00 | 0.045 | 0.025 | 17.00 | 19.00 | - | - | 8.00 | 11.00 | - | 195 | 230 | 500 | 700 | 40 | 1000 to 1100 | - (see note 6) |
| 304S51 | CrNi 18/9 0.10C | 0.04 | 0.10 | 1.00 | 2.00 | 0.045 | 0.025 | 17.00 | 19.00 | - | - | 8.00 | 11.00 | - | 195 | 230 | 490 | 690 | 40 | 1050 to 1120 (see note 7) | N/A (see note 8) |
| 304S61 | CrNi 18/9 0.03C/N | - | 0.030 | 1.00 | 2.00 | 0.045 | 0.025 | 17.00 | 19.00 | - | - | 8.50 | 11.50 | N:0.12 to 0.22 | 270 | 305 | 550 | 750 | 35 | 1000 to 1100 | 30 |
| 309S16 | CrNi 25/14 | - | 0.08 | 1.00 | 2.00 | 0.045 | 0.025 | 22.00 | 25.00 | - | - | 13.00 | 16.00 | - | 205 | 240 | 510 | 710 | 40 | 1000 to 1100 | - (see note 6) |
| 310S16 | CrNi 25/20 | - | 0.08 | 1.00 | 2.00 | 0.045 | 0.025 | 23.00 | 26.00 | - | - | 19.00 | 22.00 | - | 205 | 240 | 510 | 710 | 40 | 1000 to 1100 | - (see note 6) |
| 316S11 | CrNiMo 17/12/2¼ 0.03C | - | 0.030 | 1.00 | 2.00 | 0.045 | 0.025 | 16.50 | 18.50 | 2.00 | 2.50 | 11.00 | 14.00 | - | 190 | 225 | 490 | 690 | 40 | 1020 to 1120 | 30 |
| 316S13 | CrNiMo 17/12/2¾ 0.03C | - | 0.030 | 1.00 | 2.00 | 0.045 | 0.025 | 16.50 | 18.50 | 2.50 | 3.00 | 11.50 | 14.50 | - | 190 | 225 | 490 | 690 | 40 | 1020 to 1120 | 30 |
| 316S31 | CrNiMo 17/11/2¼ 0.07C | - | 0.07 | 1.00 | 2.00 | 0.045 | 0.025 | 16.50 | 18.50 | 2.00 | 2.50 | 10.50 | 13.50 | - | 205 | 240 | 510 | 710 | 40 | 1020 to 1120 | 15 |
| 316S33 | CrNiMo 17/11/2¾ 0.07C | - | 0.07 | 1.00 | 2.00 | 0.045 | 0.025 | 16.50 | 18.50 | 2.50 | 3.00 | 11.00 | 14.00 | - | 205 | 240 | 510 | 710 | 40 | 1020 to 1120 | 15 |
| 316S51 | CrNiMo 17/11/2¼ 0.10C | 0.04 | 0.10 | 1.00 | 2.00 | 0.045 | 0.025 | 16.50 | 18.50 | 2.00 | 2.50 | 10.00 | 13.00 | - | 205 | 240 | 510 | 710 | 40 | 1050 to 1120 (see note 7) | N/A (see note 8) |
| 316S53 | CrNiMo 17/11/2¾ 0.10C | 0.04 | 0.10 | 1.00 | 2.00 | 0.045 | 0.025 | 16.50 | 18.50 | 2.50 | 3.00 | 10.50 | 13.50 | - | 205 | 240 | 510 | 710 | 40 | 1050 to 1120 (see note 7) | N/A (see note 8) |
| 316S61 | CrNiMo 17/11/2¼ 0.03C/N | - | 0.030 | 1.00 | 2.00 | 0.045 | 0.025 | 16.50 | 18.50 | 2.00 | 2.50 | 10.50 | 13.50 | N:0.12 to 0.22 | 280 | 315 | 580 | 780 | 35 | 1020 to 1120 | 30 |
| 316S63 | CrNiMo 17/12/2¾ 0.03C/N | - | 0.030 | 1.00 | 2.00 | 0.045 | 0.025 | 16.50 | 18.50 | 2.50 | 3.00 | 11.50 | 14.50 | N:0.12 to 0.22 | 280 | 315 | 580 | 780 | 35 | 1020 to 1120 | 30 |
| 320S11 | CrNiMo 17/12/2¼ Ti | - | 0.08 | 1.00 | 2.00 | 0.045 | 0.025 | 16.50 | 18.50 | 2.00 | 2.50 | 11.00 | 14.00 | Ti:5xC to 0.80 (see note 9) | 210 | 245 | 510 | 710 | 35 | 1020 to 1120 | 30 |
| 321S31 | CrNi 18/9 Ti | - | 0.08 | 1.00 | 2.00 | 0.045 | 0.025 | 17.00 | 19.00 | - | - | 9.00 | 12.00 | Ti:5xC to 0.80 (see note 9) | 200 | 235 | 510 | 710 | 35 | 1020 to 1120 | 30 |
| 321S51 | CrNi 18/9 0.10CTi | 0.04 | 0.10 | 1.00 | 2.00 | 0.045 | 0.025 | 17.00 | 19.00 | - | - | 9.00 | 12.00 | Ti:5xC to 0.80 (see note 9) | 175 | 210 | 490 | 690 | 35 | 1020 to 1120 (see note 7) | 30 |
| 347S31 | CrNi 18/9 Nb | - | 0.08 | 1.00 | 2.00 | 0.045 | 0.025 | 17.00 | 19.00 | - | - | 9.00 | 12.00 | Nb:10xC to 1.0 (see note 9) | 205 | 240 | 510 | 710 | 30 | 1020 to 1120 | 30 |
| 347S51 | CrNi 18/9 0.10C/Nb | 0.04 | 0.10 | 1.00 | 2.00 | 0.045 | 0.025 | 17.00 | 19.00 | - | - | 9.00 | 12.00 | Nb:10xC to 1.2 (see note 9) | 205 | 240 | 510 | 710 | 30 | 1050 to 1120 (see note 7) | 30 |
| 318S13 | CrNiMo 22/5/3 N | - | 0.030 | 1.00 | 2.00 | 0.025 | 0.020 | 21.00 | 23.00 | 2.50 | 3.50 | 4.50 | 6.50 | N:0.08 to 0.20 | 480 (see note 10) | - | 680 (see note 10) | 880 | 25 | 1020 to 1100 (see note 7) | 30 |
| 904S13 | NiCrMoCu 25/20/5 | - | 0.030 | 1.00 | 2.00 | 0.040 | 0.025 | 19.00 | 22.00 | 4.00 | 5.00 | 24.00 | 27.00 | Cu:1.00 to 2.00 (see note 11) | 220 | 255 | 520 | 720 | 35 | 1050 to 1150 (see note 7) | 30 |

NOTE 1. See 21.1.2. In case of dispute, $5.65\sqrt{S_o}$ gauge lenght on round proportional test pieces or 50 mm gauge lenght on 12.5 mm wide rectangular specimens shall be used, where $\sqrt{S_o}$ is the original cross sectional area of the test piece.

NOTE 2. The steel is cooled in water or rapidly in air.

NOTE 3. Hot rolled plates may be supplied in the "as rolled" condition cooled in water or rapidly in air, provided that the following conditions are met:

(a) The temperature during hot-rolling does not fall below the minimum of the solution anneal temperature range;

(b) The material is in a satisfactory metallurgical condition;

(c) The mechanical property and intergranular corrosion requirements are satisfied.

NOTE 4. The terms "softening", "annealing" and "solution annealing" have the same meaning for these steels.

NOTE 5. When the intergranular corrosion test is required (see B.10), the intergranular corrosion test piece treatment temperature within this range shall be selected by the manufacturer unless otherwise agreed.

NOTE 6. For this steel the intergranular corrosion test is applicable (see B.10), but the intergranular corrosion test piece heat treatment is not applied.

NOTE 7. Note 2 is not applicable to this steel and plates are afforded the final solution annealing treatment.

NOTE 8. N/A = intergranular corrosion test not applicable except by special agreement.

NOTE 9. In this column, C is the carbon content of the cast.

NOTE 10. For plates >20 mm thick $R_{p0.2\ min.}$ 450 N/mm², and for plates > 80mm < 100 mm thick $R_m$ 640/840 N/mm² apply.

NOTE 11. Nitrogen up to 0.15 % max. may be added by agreement.

B.S. 15.01 - Part 3 - 1990

| Table 3. Permissible variations of products analysis from the specified composition range | | |
|---|---|---|
| Element | Maximum of the specified composition range | Permissible product analysis deviation from the specified composition |
| C | %<br>≤ 0.030<br>> 0.030 | %<br>0.005<br>0.01 |
| Si | ≤ 1.0 | 0.05 |
| Mn | ≤ 2.0 | 0.04 |
| P | ≤ 0.045 | 0.004 |
| S | ≤ 0.025 | 0.003 |
| Cr | > 15.0 ≤ 20.0<br>> 20.0 | 0.20<br>0.25 |
| Mo | > 2.0 ≤ 3.0<br>> 3.0 ≤ 5.0 | 0.08<br>0.10 |
| Ni | > 5.0 ≤ 10.0<br>> 10.0 ≤ 20.0<br>> 20.0 | 0.10<br>0.15<br>0.20 |
| Cu | ≤ 2.0 | 0.07 |
| Nb | All ranges | 0.05 |
| Ti | All ranges | 0.05 |
| N | ≤ 0.22 | 0.01 |

NEUMIRA